THE MR. BILL STORY
(Ornithopter Development, 1968-1991)
Jeremy M. Harris

Getting Started

I first met Jim DeLaurier in January of 1973 when a friend, Charlie Holt, introduced us at Battelle Institute in Columbus, Ohio where the three of us were research engineers. Charlie knew that I was interested in flapping-wing flight and had built a wind tunnel in my basement. I barely remember anything of that meeting, except that Jim was tall, friendly and allowed as how he'd like to see the tunnel sometime. A week or two later he came over in the evening and we began what we came later to call the 500-year conversation. It was immediately apparent that we shared an interest in many subjects, strange aircraft and photography being the most obvious ones. Jim listened politely to my spiel about flapping-wing experiments and cast an expert eye on the tunnel and its 15-inch square test section. He didn't say so, but I imagine he was already thinking of ways to improve it. Neither of us had the slightest idea that we were going to be friends and partners for 17 years while struggling with the most difficult challenge of our careers, a challenge that would, ironically, be met almost completely outside our normal working hours.

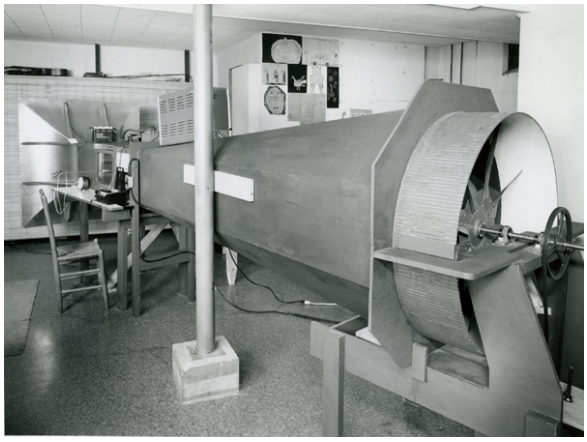

The wind tunnel as Jim first saw it

Natural flight as an engineering problem had entered my consciousness in 1968, when I was daydreaming about interesting applications for a kind of mechanical amplifier I was analyzing for my Master's thesis at Ohio State. The capstan amplifier used continuously-slipping bands or cords wrapped around a rotating drum. If it was configured correctly, it became a very simple and lightweight servomechanism that would accurately repeat input motions at a much higher energy level (it wasn't magic; the energy came from a motor or engine driving the drum). Because its moving parts were extremely light and responsive, the capstan amplifier looked like a promising way to rig an ultra light drive that could use the arm motions of the pilot to flap the wings. Just for fun, as a side activity to the thesis, I began to look at aerodynamics. Since I was a mechanical engineer, this had to be started at an elementary level. I soon learned that the classical operative term for a flapping wing aircraft was "ornithopter" (Greek for "bird-like wing"), and that the first well-known person to speculate about building one was Leonardo Da Vinci. By the end of the year I had absorbed a fair amount of the available information on flapping flight, developed a theory of sorts, and written a long unpublished paper to document it.

From 1968 until I finished my thesis in 1970, the ornithopter problem gradually became a stand-alone issue in my mind. For the thesis itself I used something much more mundane, a

multistage recorder drive, as an application example. I still thought the amplifier might be used in some kind of advanced personal flight machine, but the task of understanding flapping flight itself had taken precedence over any particular drive method. To test my theory, I built the tunnel and added a strain-gaged apparatus which could flap small wing panels. I also constructed a rotating-arm wing test machine using an electric shaver drive motor. From 1970 through '73, I worked at getting initial experimental results and extending the theory to cover wing arrangements more complex than a single pair of stiff panels (birds, for example, have multiple articulation hinges that allow complex flapping motions). I was particularly interested in articulated hinging as a means for reducing the amount of lift variation that occurs during flapping. The first configuration I analyzed, in which I simply tried to copy a bird-like hinge arrangement, didn't work out very well. But the next concept, involving two outer panels and a translating center wing panel that birds don't have, appeared to offer not only reduced lift variation but other advantages as well. These included inherent mass balance, less extreme cyclic load changes, and a convenient arrangement for connecting an oscillating drive to the wing panels. It was at this stage of the development that Jim entered the picture.

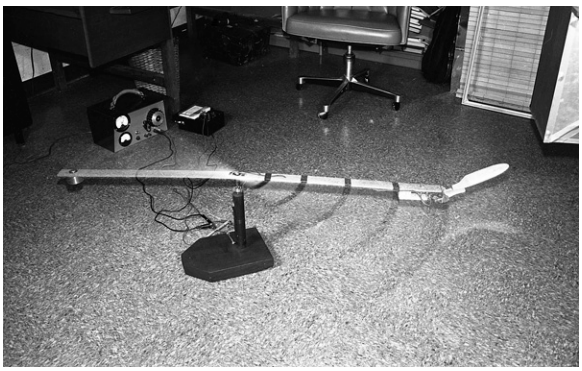

The rotating arm in action

We didn't suddenly decide to collaborate on flapping flight. During the two years we were both at Battelle, we discussed the ornithopter work on occasion, but spent more time on other subjects. Jim had been helping me improve my tunnel's flow characteristics, and he suggested we use the tunnel to investigate the properties of the Kline and Fogelman airfoil, an unusual step-wedge profile that had been receiving a lot of publicity. This resulted in a paper that we presented at an MIT low-speed flight symposium in 1974. If the airfoil had any magic properties, they didn't show up in our results.

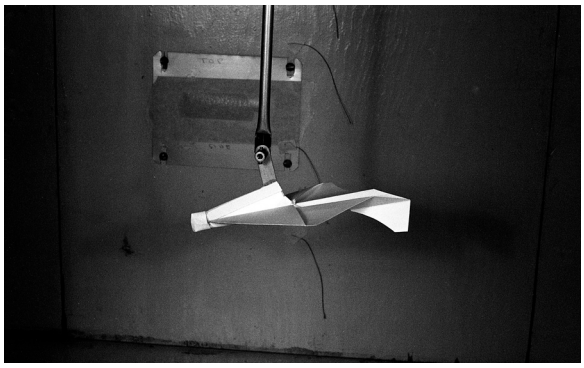

K&F glider mounted in tunnel

Jim's professional specialties were lighter-than-air technology and stability & control. He got his aeronautical engineering training at the University of Illinois, Stanford University, and a year of post-doctoral work on towed and tethered bodies at the Von Karman Institute in Belgium. He also had considerable experience as an aeromodeller and designer of airplane-like kites. While he was able to do some aeronautical research at Battelle, the amount of work available that directly suited his abilities and interests was small. One thing he had always wanted to do was teach, and when a position became available at the University of Toronto Institute for Aerospace Studies (UTIAS) in late 1974, he took it. We agreed to stay in touch.

At the time Jim went to Canada, I was scheduled for some extended trips to California on a government research program. Living in a motel out there, I had ample time to think about the future. I had to decide whether to continue with the ornithopter or find a more reasonable hobby. While contemplating this, I did a little more theoretical work and mailed the results to Jim. Both he and I were interested in basic, personal research in low-speed (subsonic) aerodynamics and flight vehicles. Natural or flapping flight was one of the very few areas still open to fundamental investigation and engineering analysis. My decision was to stay with it and work more intensively. On returning to a normal life in Columbus, I arranged to take intermittent days of leave-without-pay, usually Fridays or Mondays, to allow more time for personal research. Battelle also granted a release that allowed me to pursue ornithopter patents on my own (I received one in 1979, and Jim and I applied jointly for another one, covering shearflexing, in 1991). Evidently, the hobby had become an avocation.

Jim, with his brother John, preparing to fly an airplane kite

In early 1976, Jim invited me to Toronto to give a seminar on my wind tunnel results and comparison with theory. He had been initiating some flapping-wing research with his students, and thinking about theoretical approaches of his own. Shortly after the seminar, I tried flying a 3-ft span, three-panel model driven by rubber stretched in the linear mode. This was energy-efficient use of the rubber and provided enough torque to drive the wings without a gear reduction, but a limitation was that only about a dozen flapping cycles could be stored. I filmed the flights and made an elaborate comparison chart attempting to show that the powered flights were more effective than the plain glides. Jim recently described this effort as "positively theological," and I can't disagree with that appraisal. Nevertheless, Jim took it seriously enough to invite me again to Toronto in the winter of 1976-77 to test the entire model, electrically driven, in a large wind tunnel. This marked our first direct collaboration in hands-on ornithopter work. It turned out that the model didn't thrust at all (except in weird, unpredictable bursts) unless we allowed some pitching freedom on the outer panels. In the light of later knowledge, it is clear that the thin, uncambered airfoil of the 3-foot model was just about the worst possible choice for an ornithopter. We learned a good deal from the experience, though, and managed to get a couple of hours running time on something that flapped and stayed in one piece.

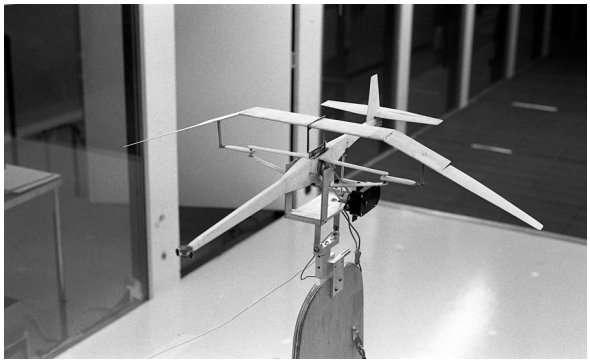

The 3-ft model (with electric motor drive) on its test stand in the big tunnel.

Getting Serious

By late '76 I had already started layout drawings for a much larger, engine-driven, radio-controlled research model. As the plan for the aircraft slowly developed, we recalled the results from the 3-foot model and began to consider the interrelated problems of airfoil section shape and pitching freedom. In an ornithopter, the ideal mode for pitching along the outer panels takes the form of a linear twist that makes each part of the wing just avoid stalling at every instant during the flapping cycle. The action has to occur dynamically; that is, the wing has to go from positive to negative twist and back each time the wings flap. A thin, undercambered wing will twist quite easily, a fact the Wright brothers exploited in their wing-warping system. A modern thick airfoil, however, forms a closed tubular wing panel that is torsionally rigid. For a fixed-wing aircraft this is advantageous; but for an ornithopter it means the cyclic twisting required for efficient flapping propulsion can't occur. It was frustrating to contemplate being locked out of using the most effective contemporary airfoils because of the torsional rigidity problem. We knew that stretchable skin materials such as rubber sheeting could allow thick wings to twist, but we wanted to retain the enhanced bending strength that rigid coverings can provide. In addition, resorting to stretchy coverings seemed to us a little like cheating. As engineers, we couldn't give in without trying for a direct solution. We considered, and even drew up, an arrangement that broke the wing up into small, rigid, spanwise segments that pitched independently to create a stepped twist. It was hard to get enthusiastic, though, because in truth the stepped design seemed even more of a compromise than a rubber skin.

In the meantime we tested a series of small, rigid, oscillating wings in my wind tunnel, using a rig that allowed variable phase (variable timing) of pitching and plunging motions. This work eventually resulted in our publishing a paper in the Journal of Aircraft (May, 1982). We concluded that phasing was important but not extremely critical, since lagging angles anywhere from 60 to 90 degrees gave good thrusting results. Because we were both full-time employed and living 430 miles apart, efforts such as these stretched out over considerable periods of time, and resulted in a voluminous correspondence which has continued into the email era.

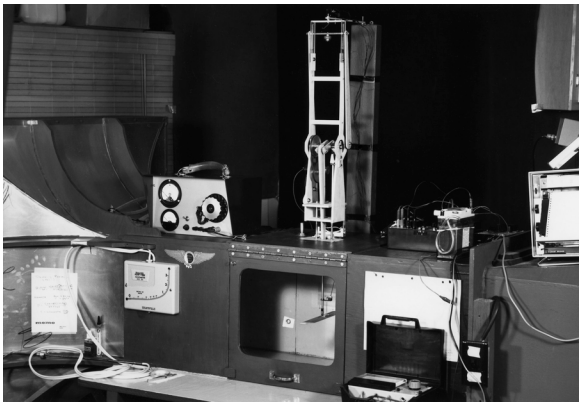

The oscillating wing apparatus and instrumentation

In the summer of 1979, shortly after we had met in Washington on a beastly hot day to tour the Air and Space Museum, we pondered the well-known fact that a circular tube loses a lot of its torsional rigidity if it is slit lengthwise. When a carefully-slit tube is slipped over a supporting shaft and torqued, the mating edges of the slit slide smoothly along each other with a shearing action, giving torsional deflections that are many times the amount which would buckle and destroy an unslit tube. One reason the subject came up was that Jim had been corresponding

with a British experimenter, Dr. Simon Farthing, who had worked out an ingenious flapping wing windmill using a compliant covering and a slit-tube spar (Jim's group in Toronto had also devised an oscillating "wingmill", but of completely different design). In August, I mentioned in a letter that I'd been thinking again of the slit tube and how, several years before, I'd been playing with the plastic spine of one of those pseudo-spiral bound notebooks. It had amazed me that the spine had practically no torsional resistance, but nevertheless was quite stiff in bending. Six days later I had a sudden inspiration and dashed off another letter to Jim. My thought was this: The slit tube does what we want; namely, it twists easily even though its "skin" is quite thick and strong. It doesn't buckle or wrinkle as the twisting progresses, even when the deflection angle is many degrees. But if it's just used as a spar, the slit tube can't solve the problem of twisting an entire wing panel. The ribs and/or covering still have to be dealt with, and they are the source of the undesirable rigidity. So *why not deform the tube so that it becomes the whole wing panel ?* I sketched a cross section indicating this transformation, where the slit is transported outboard to become the trailing edge of a hollow airfoil. When I made the sketch and sent the letter, it was simply wishful thinking. It was not at all obvious whether such an extreme deformation of the tube's shape would preserve its desirable properties. This time, Jim didn't wait to write but telephoned me enthusiastically the next day. Within a few hours we had constructed cardboard model wing panels that showed the basic idea to be sound. We named the panels' combined sliding and twisting action "shearflexing".

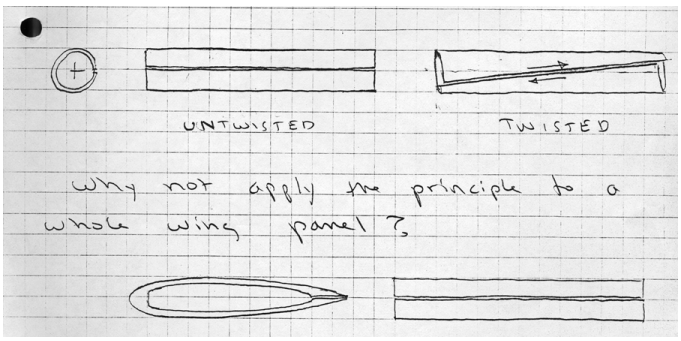

The original shearflex concept sketch (August, 1979)


Early shearflex demonstration wing panel

There followed an intense period of exploring the details of shearflexing, noting its limitations, and taking up such questions as, "Will it work with rib and spar structures inserted in the shell?", "Will it work with tapered and/or curved wing planforms?", "How can we hold the split trailing edge together and still let the edges slide?", "What are the best methods for mechanically driving the twist?", and so on. Within a month or two we had dropped our half-hearted plans for a segmented wing and were gung-ho on shearflexing.

We decided to make balsa-sheeted wings with a NACA 0015 symmetrical airfoil. We had learned that rib-and-spar construction would work with shearflexing, provided the ribs were

separated into upper and lower parts to allow sliding at the split trailing edge. Each outer panel was built in this fashion, with a single round spar (made from hollow aluminum arrow-shaft tubing) passing through holes in the ribs at their quarter-chord stations. The tubular spar passed freely through the holes and was attached at the tip, so when the shaft was rotated, the panel was driven through a shearflex twist deflection. The twist drive was implemented by attaching the inner end of each panel's spar to the center panel through a universal joint. The center panel was reciprocated by a scotch yoke, and simultaneously pitched in proper phase by a secondary linkage. Thus the center panel reciprocation flapped the outer panels, and the center panel pitching drove the outer-panel shearflex twist. Although all this can be summarized in a paragraph, it required extended periods of planning, revising, and fabricating to transform into hardware. Hence it was not until 1983 that we were actually ready to test the flapping arrangement.

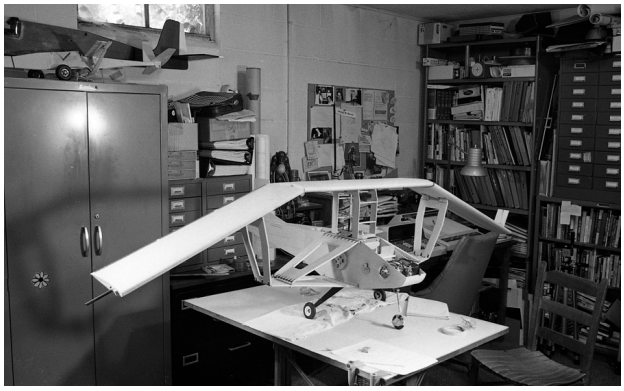

The infamous balsa-sheeted outer wing panels

Meeting Reality

Jim came down to Columbus in June for flapping tests of the wings. The ornithopter was in my basement, rigged so that we could attach a variable-speed electric hand drill to the second-stage input shaft. Everything functioned, but only in noisy and ponderous slow motion. We were expecting to need 4 or 5 Hz (cycles per second) flapping frequency to fly, and our rig was threatening to self-destruct at about 2.5 Hz. In addition, we could only get 15 degrees or so of shearflex twist instead of the desired 20. The panels could be twisted close to 20 degrees by hand, but losses due to flexure in the linkages, joints, and long torsional spar/drive shafts were substantial. As Jim commented, it just didn't look like something that wanted to fly. We were so discouraged that we decided to shelve shearflexing and thick airfoils altogether and look back toward more traditional undercambered, single-surface wings like those used in some rubber-powered ornithopters.

By September we had set up the rotating arm and begun to experiment with miniature test panels. We got good results from wings covered with a membrane of plastic shopping bag material, formed and stiffened by a small stick or dowel along the leading edge, together with circular-arc ribs cut from balsa sheet and glued to the underside of the membrane . We gaged performance by timing the revolutions of my rotating-arm machine at a given flapping frequency. The faster the arm revolved, the more thrust the wing must be producing. The rotating arm couldn't evaluate lift, but we knew from the general literature as well as our own wind tunnel tests that the lifting performance of circular-arc airfoils was decent. Because of the inherent torsional flexibility of the thin cambered surface, the phased twisting tended to take care of itself. It was difficult to quantify, but it worked. We agreed to develop new outer

panels based on our findings. While I worked on fabricating those and continuing tests of the flapping drive and support linkage, Jim undertook construction of a lighter and stronger center panel that would embody a cambered rather than a symmetrical airfoil. It would also utilize some of the carbon fiber reinforcing material he and his team of students and engineers were applying in other projects at UTIAS. In scaling the tiny rotating-arm test panels up to suit our several-pound ornithopter, we naturally made some improvements. We elected to use arrow shaft material again, but this time the glass-carbon fiber type rather than aluminum. In each outer panel the shaft became a leading-edge spar, and the ribs were attached to it via thin aluminum rings so they could pivot freely. A covering of green rip-stop nylon folded over the leading edge, to fair it in.

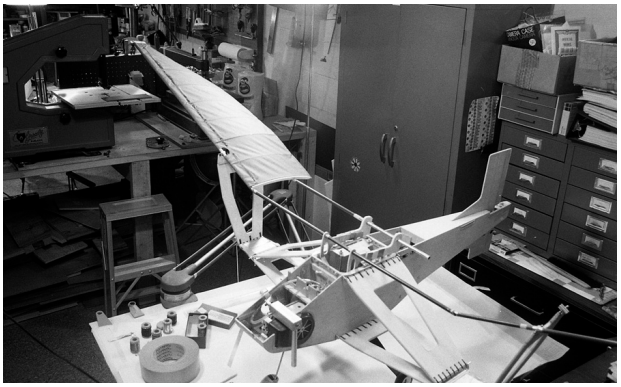

Trial assembly of a green nylon wing panel (also shows modified engine with blower housing)

In addition to wing revisions, the O.S. 45 helicopter engine had been the subject of a fair amount of work. During Jim's June visit we had attempted the first engine run, with only the center panel mounted. The initial configuration included two nice, custom-made features: a shrouded cooling fan at the rear, and a carefully-modified helicopter centrifugal clutch at the front. These modifications required adding a drive pass-through at the back of the crankcase, and turning down and cross-drilling the crankshaft. Within 30 seconds of first startup the nice, custom features were distributed over the cement pad of my back patio. We learned very quickly that all sorts of things can be hung on an engine, but it's generally not a good idea to modify the engine parts themselves. In the ensuing months an unshrouded, bolt-on fan was added at the front of a stock replacement engine, and the clutch was discarded. Along with it went the luxury of being able to run the engine without flapping the wings.

In my basement, I continued flapping trials of the green wings with the drill-motor drive. There was no problem up to approximately 3.5 Hz ; but above that the panels began to show what appeared to be vibratory resonances, similar to whipping but more violent. Our firm goal was to be capable of flapping at 5 Hz. The situation was complicated somewhat by the fact that I didn't have the new center panel yet, and had to simulate it with some jury-rigged stiffeners applied to arrow-shaft cross pieces. In an attempt to isolate the cause of the trouble, I removed the outer panel ribs and covering and just flapped the bare spars. Without the damping from the covering, the resonance became more marked. There seemed to be a wall, or "Hertz barrier", beyond which the mechanism just wouldn't go. It wasn't that the drill lacked power. In one test I just kept on squeezing the trigger past 4 Hz, and the transients became so violent that the right-hand spar snapped. My best guess at the time was that the resonance problems were associated with a double-frequency vibration that occurred because of the way the outer panel pivots were supported. We were using vertical supports we called "H&D links" which swung through a small arc at twice the flapping frequency. This meant that between 4

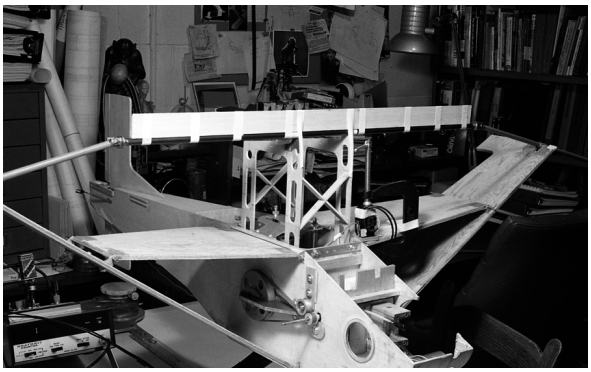

The sliding-joint arrangement which which broke the 5 Hertz spar-flapping frequency barrier

and 5 Hz they generated some 8 to 10 Hz excitation, and I was concerned that this was exacerbating the difficulty. I talked this over with Jim and looked at alternative supports. The most practical revision eliminated the H&D links, but required sliding joints at the tips of the center panel. I built a quick-and-dirty plywood version of the new outrigger supports and tried flapping the spars once again. The test was successful up to 5.5 Hz and the sliding joints seemed to behave, so we decided to proceed with the new support configuration.

In December '84 I went to Toronto, where Jim was completing the new center panel. We assembled the whole ornithopter, still with the plywood outriggers, for the first time. Because it was winter we settled for an indoor test, using a temporarily-installed Astro-Flite 40 electric motor to drive the wings. In the UTIAS cafeteria, the ornithopter sat on its gear and began to flap as I advanced the transmitter speed control and Jim crouched across the room, ready to act as javelin catcher. At a couple of Hertz the model began to roll and accelerate slowly. We had a vehicle that developed enough thrust to move.

The cafeteria taxi test with completed 'greenwings' and new center panel

Chasing the Chicken

In Columbus I concentrated on replacing the temporary outriggers with flight-ready ones built up from balsa reinforced with carbon sheeting. I also proceeded with the revised and simplified engine arrangement. In April of 1985, Jim came down for another try at running the engine. We set up on my back patio again, and this time were successful at getting extended engine runs. Before Jim left, we went out to a parking lot near my home and did a little slow taxiing under radio control.

In June I was back in Toronto to participate in what we viewed as a rational sequence of events, capped by a flight. We would make some parking-lot taxi runs to give our pilot, Don Uffen, a chance to become familiar with the controls. Then we would go to Maple Airport and practice a bit, and take off. In spite of the lift-balancing ability of the three-panel wing arrangement, we learned that taxiing an ornithopter rapidly is a non-trivial challenge. Later

Poultry pursuit gets under way

knowledge would reveal that at that stage there were multiple overlapping reasons why a takeoff or anything approximating it was physically impossible. But we didn't know it then, and the parking lot runs got made; and we even went out to the airport and gave it a try. Looking at the videotapes of those events, we couldn't help having a good laugh. Someone pointed out that the scene resembled a bunch of earnest people chasing a wayward chicken, and the description stuck.

A team conference resulted in some firm decisions. Everyone agreed that the outer panel span had to be increased if we were going to develop enough thrust to sustain in the air. Jim and Don Uffen determined that more tail authority was required for controllability. Hence new, longer outer panels and a redesigned, extended rear fuselage and empennage were to be constructed. Jim would design and fabricate the new aft end assembly. In Columbus, I would shorten and reinforce the center panel, build the new outer wing panels, and bench-test the new wings to 5 Hz. These were major modifications, and time was short if we were going to try again in early fall, before it got cold.

Picking up the Pace

I took home a supply of the covering material for the new outer panels. It was a white, close-weave polyester backed with a thin mylar film. Jim's group had used it to make balloon envelopes in their lighter-than-air research. My wife Jane sewed the spar retainer folds and trailing-edge hems, as she had done earlier for the green wings. The new Mark-5 panels, known as the "white wings", went together fairly quickly, and soon it was time for another flapping trial. I had developed a policy of looking for alternatives to running the engine whenever possible, since it required a time-consuming outdoor setup, sprayed large quantities of castor oil over everything around it, and might start in two seconds or two hours, depending on the planetary alignments, etheric forces, and other factors we were never quite able to pin down. So out came the electric drill. After a few seconds of flapping it was obvious that we were in a different structural regime with the longer panels. The bending deflections, which had been reasonable with the previous green wings, were suddenly out of control; and the spars seemed about ready to snap at only 3 Hz. Because

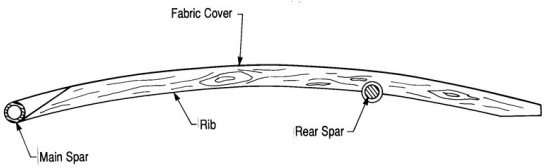

'Whitewing' airfoil section

the loads increase as the square of the frequency, 3 Hz was many moons away from the 5 Hz we were counting on.

On top of everything else in this busy summer of '85, Jim had been working on a formal theory of flapping flight which was shaping up very rapidly. He had already input the data describing the new white wings, and the preliminary results confirmed the need to hold fast to our 5 Hz goal. I sat in my basement and considered how to tell Jim that there was no way we were going to achieve it. After a while I hit on the oldest solution in the book: bracing wires. They drag, but not too much at low speeds; they weigh hardly anything, and they give big-time increases in bending stiffness. Jim agreed that we should try wires, and in a few days we were back in business. When it was no longer possible to avoid running the engine, I set up the thorax (forward fuselage) and wing assembly on the back patio and clamped the whole machine to a Black and Decker Workmate. A micro switch was rigged to be tripped once per flapping cycle and send its output to an electronic frequency counter. The engine cooperated, and we had our proof test of a few seconds of heart-stopping action at 5 Hz.

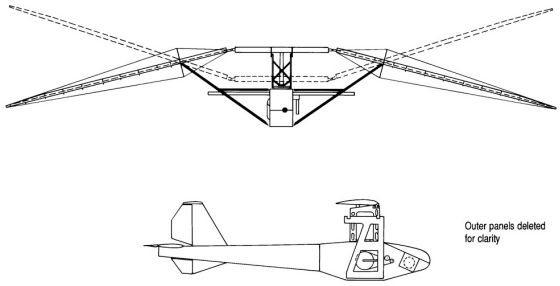

Whitewing front and side views, showing brace wires on the outer panel spars

In late September the machine was back in Toronto as we put the finishing touches on the rear fuselage and tail Jim had built, and reviewed options for getting airborne. The increased tail moments would enhance controllability both on the ground and in the air, but other factors argued against taking off from the ground. For one thing the longer wings almost hit the ground on downstroke. Beyond that, it seemed foolish to risk ground accidents that might cause damage and eat up precious time with repairs. The consensus was to take the landing gear off and hand-launch from the top of a hill or ridge. That way we would have some guaranteed air time even if the ornithopter couldn't sustain level flight. We elected to launch

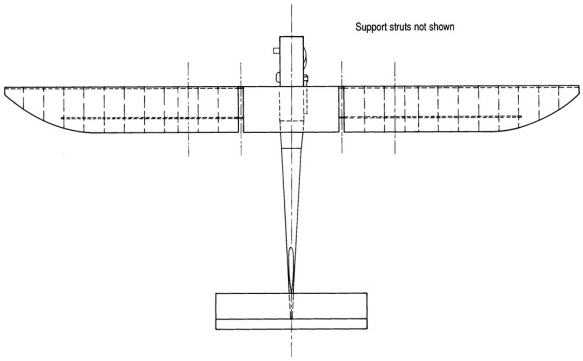

Whitewing plan view

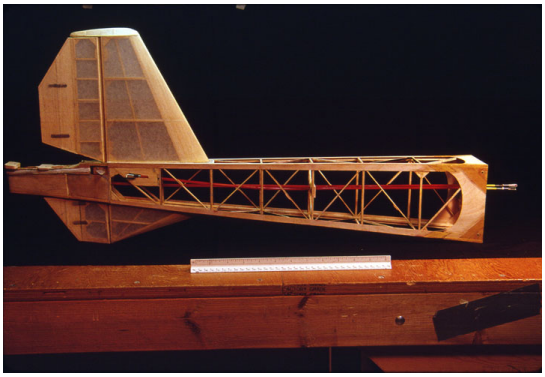

The new rear fuselage and vertical tail

from an artificial landfill called Morningside Hill, overlooking Highway 401 in Scarborough, Ontario.

First Launch

The group that arrived at Morningside on October 3, 1985 established the minor expedition mode that was always to characterize launch days. Besides Jim and me and pilot Don Uffen, there were several helper/observers from Jim's research group as well as others from UTIAS who were interested in the project. The ornithopter was transported in pieces: thorax, outrigger struts, outer wing panels, and rear fuselage with attached tail. The launch equipment consisted of several tool and accessory boxes, a large motorcycle battery to power the electric starter, two vintage video cameras with separate recording units and batteries, a Workmate to support the ornithopter for initial assembly and repairs, a Bolex 16mm movie camera and accessories, an 8mm movie camera, and various still cameras. Thus we welcomed extra hands for the climb to the launch point.

We bolted the thorax to the workmate and assembled the aircraft, which at this time spanned 9.5 feet and weighed about 6.5 lbs. The engine started easily and I handed the machine, wings flapping at 2 Hz or so, to Jim. I ran for my assigned camera, position. Jim stepped to the edge of the dirt path and looked down at the bumpy grass field 60 feet below. Holding the craft over his head, he looked around to verify that I was ready with the Bolex and that the upper and lower video crews were set. He nodded to Don Uffen holding the transmitter. Don nodded back, and Jim launched the machine. Even with my vision limited to the tight frame of the Bolex viewfinder, I could see that it wasn't going to sustain, but it wasn't going to crash, either. Don flew the ornithopter out to our left, then back to the right a little, toward the highway. I remember noting with relief that the fuselage was nice and steady in the air. Don set it down gently in some high grass near a fence. When we got the machine back to the top of the hill we found no damage, so we flew it again, with approximately the same results. On the third flight the engine quit immediately after launch, giving us an unplanned glide test. The static glide was not nearly as long as the powered glides, which told us that the flapping was producing a significant amount of thrusting effort.

'Whitewing' version of Mr. Bill in the air

Because one of the spar bracing wires had broken during a runup, we had asked Don to hold the flapping frequency down to about 4 Hz. When the 16mm movies were processed, the sharp frames together with a step-frame projector made it easy to count the total number of flapping

cycles in each flight. The first flight contained 52 flaps in 12 seconds, giving an average of 4.3 Hz. Not bad, since Don had to judge the rate without help from any measuring device. The team was elated because it seemed clear that all we had to do was find some stronger bracing wire, raise the flapping frequency to 5 Hz, and success was ours. It's just as well we didn't know the truth.

Interlude

At about this time we got a chance look briefly beyond our own concerns and assist in another flapping-wing project. Dr. Paul MacCready and a team from his company, AeroVironment, were working to develop a flying, half-scale replica of a giant pterosaur known as QN (Quetzalcoatlus Northropi). Their primary goal was to develop a system capable of controlling the long-beaked, nearly tailless craft under strict constraints of anatomical accuracy. In this difficult challenge, they had already achieved outstanding success. There remained the secondary goal of sustaining by flapping flight with the 18-foot span, 40-pound replica. Jim was acquainted with Ray Morgan and Peter Lissaman at AeroVironment, and was glad to fulfill a request to apply our analysis to the QN configuration. He did a set of exploratory computer runs, and I followed up with a more detailed series of cases in the region of primary interest. The computations were mainly concerned with the response of lift, thrust and required power to variations in mean angle of attack and wing-twisting amplitude. We found that QN, at its design flapping frequency of 1.2 Hz, was limited to a rather narrow set of conditions that could provide useful amounts of net thrust. We made some suggestions for improvements, but as it turned out the schedule and cost constraints were such that the program was concluded before sustained flapping flight could be achieved.

The QN replica in a controlled glide

Just Around the Corner

It is characteristic of research projects that victory always appears to be just around the corner. This is because problems usually appear in serial order, with the remaining difficulties residing in a hidden queue which the researchers, instinctively seeking peace of mind, tend to regard as empty. Thus it was with considerable confidence that we undertook a few modifications over the winter of 1985-86. The solid music wire outer-panel braces were replaced with stronger stranded wire. The center panel had been pitched by a linkage to help drive the outer panels in twist. Since it appeared that the varying lift forces along the span were providing sufficient twist, the linkage was removed and the center panel was allowed to "flat flap". The final revision was to change the stabilizer airfoil from a traditional cambered, flat-bottom type to a

symmetrical section (RAF 27). This was done because it had been necessary to apply full up-elevator trim during the initial flights, indicating that a decrease in camber would help.

On June 9, 1986 we re-convened at Morningside. Instead of cruising off toward the horizon, the ornithopter veered to the right and spiraled into the ground within 5 seconds of launch, treating us to our first crash. It happened so quickly that no one was sure what the trouble was, even with video replay. Five days later, repairs completed, we tried a couple of static glides to check lateral stability. The glides seemed satisfactory, but on the next powered flight the ornithopter spiraled in again after 13 seconds. The damage was more severe this time, and our testing window (the time both Jim and I were available) was about gone anyway, so there would be ample opportunity to contemplate what to do. At that time the outer panels stroked equally up and down, giving a zero mean dihedral angle over a full flapping stroke. We decided to lengthen the outriggers enough to provide 2 degrees of positive dihedral at midstroke. This would bias the whole wingstroke upward and provide a positive mean dihedral angle. Whether a time-averaged flapping wing craft would actually respond like a fixed-wing airplane with positive dihedral, we did not know (for static glides, the outer panels had been fixed at a moderate dihedral).

The initial instant of a crash

On September 17, with Sunjoo Advani taking over as pilot, we found the ornithopter cured of its deadly spirals but prone to an annoying left-turn bias. Since throttling back allowed recovery, the fault was diagnosed as thrust asymmetry rather than residual spiral instability. One possible cause of uneven thrust was a mismatch in wing rigging. The outer panels each had three brace wires. A pair of opposing wires above and below the main spar provided stiffening against primary bending loads. A third wire ran over a horizontal, forward-facing kingpost or "bowsprit" and extended to the wing tip. The twist response of the wings was primarily governed by differential bending between the stiff leading-edge spar and the combination of fabric trailing edge and short, slender rear spar. However, the tension in the forward brace wires could be used to fine-tune each panel's torsional stiffness. Since the wing rigging seemed balanced on this occasion, further field corrections were attempted by increasing the rudder area with balsa sheet and diverting the side-directed flow from the engine cooling fan. Eventually we got straight-line flight at 5 Hz, but it was again evident that the ornithopter was not capable of sustaining. The 17th, despite its frustrations, was a memorable example of a productive day in terms of gaining useful experience. We managed an unprecedented string of 5 flights without significant damage. Sunjoo showed his superb skill at anticipating the quirky behavior of the bird and maneuvering around obstacles at the last instant to get us yet another safe landing. Finally, on the sixth flight he couldn't avoid touching a wingtip to the grass and the ornithopter cartwheeled in with a sickening crunch. We went home dejected and puzzled.

At this time Jim's analytical work had progressed well beyond its initial form. In addition to the aerodynamic analysis program known simply as "Flapping", he had developed a complementary program, "Dynflex", which calculated the aeroelastic twisting and bending response of the outer panels. The information from Dynflex was incorporated into Flapping to predict the panel's average lift, thrust, and propulsive efficiency. Now, back in Jim's basement workshop, we decided to check some parameters. We braced the wing panels and pulled their trailing edges with a spring scale at various locations along the span. We were measuring static deflections to get structural stiffness inputs for Dynflex that really reflected as-flown values. We ran these numbers on Jim's Macintosh and found that the analysis predicted performance about as anemic as we had observed. We had seen a lot of "handkerchiefing" during the flights, meaning that the outer panels were twisting to the point where they flashed like white semaphores with each stroke. This suggested that the wings were on the loose side of optimum. Rigging by increased forward wire tension could stiffen them a little, but we wanted a stronger change. Looking at the rear spar, we could see that extending it and/or making it from a stiffer material would move in the right direction. We estimated the inputs representing some rear spar changes that we could readily make with available materials, and ran the cases through Dynflex and Flapping. Things looked better right away, and the largest predicted improvement in thrust corresponded with changing the 1/4-inch diameter rear spar rod from hardwood to solid fiberglass. Within a day the modification was done.

We went out to Morningside again on September 24, and were rewarded with two really encouraging flights. The second flight doubled our best previous time, lasting a marathon 26 seconds. In fact, things went well enough to reveal the next difficulty in the queue, which was a tendency for the first-stage drive belt to have its teeth stripped off. We attributed this to better transfer of energy from the engine to the wings, in other words a favorable problem. The machine had appeared to travel straight out from the hill after reaching flying speed, so it was tempting to formally declare sustained flight. However, we had established a firm criterion that success could only be claimed if the ornithopter flew higher than the launch point and made a true discretionary landing. But we didn't mind waiting a little longer, since true sustaining flight seemed clearly imminent. That is, just around the corner.

Digging In

By 1987 the project had settled down to a routine, of sorts. Flying was done in June and September, the best times for good weather as well as favorable periods for me to take leave or vacation, usually for two weeks. Analysis, modifications, and major repairs were done in the winter and over the dog days of summer. In February or March, Jim usually came down to Columbus for strategy sessions or component experiments, plus a little straightforward R&R. Our families also became used to the routine, and the ornithopter effort, for better or worse, was becoming a part of their lives. Jim's daughter April had drawn a miniature "Mr. Bill" logo on the engine compartment cover. Mr. Bill was the animated clay character on *Saturday Night Live* who always got flattened or beaten up in some fashion. This seemed appropriate because each launch and forced landing of our machine put it at the mercy of wind, gravity and most of

all, topography. In addition, the ornithopter's efforts to stay aloft had an aura of self-torture that suited the Mr. Bill image. The nickname soon became official.

3-D model of the Mr. Bill character

Having rebuilt the first-stage drive over the winter, and completed the usual minor upgrades to various parts of the machine, we prepared to resume the flight tests in June of '87. The Morningside hill was off limits, because it had recently been scheduled for conversion to a recreational water slide. Jim and other team members scouted the Toronto area for alternative sites. Two places were found, one at Mono, Ontario and another near Newton-Robinson. Since hand launches themselves could not reliably achieve flying speed, moderate headwinds were important. Having two sites offered us increased chances for acceptable wind directions, South for Mono and North for Newton-Robinson. On June 4th the wind was right at Mono, and we went out to inaugurate the 1987 trials. Our first and only flight of the day ended in a crash after 16 seconds when an outrigger strut fitting failed. By the 13th repairs were complete and we traveled to Newton-Robinson, but gave up after one disappointing 12-second flight because a carburetor screw fell out, leaving us with no throttle control. On the 15th we were back, and got some encouragement from a 27-second attempt which broke our endurance record by one second. Sunjoo got us five more damage-free flights, but none longer than 15 seconds.

This time we didn't have any obvious mechanical problems or aerodynamic shortcomings to blame. Our computer runs continued to show that we should be sustaining at 5 Hz. We couldn't shake the feeling that minor gremlins were somehow doing us in. A better launch, a little more throttle, a slightly different brace wire tuning or rear spar configuration, better engine settings; any of these might somehow be the answer. This mood persisted over the summer, and we arrived at the next flight-test window with determination to just dig in and make it happen. September 21 found us at Mono again. Sunjoo Advani was sightseeing in Nepal, so Eric Edwards had agreed to step in as pilot. Determined or not, the best we could manage were three short, disappointing flights before nightfall. The next day the wind was right for Newton-Robinson. We led off with three static glides to check some control response and glide slope questions. Then Eric proceeded to equal Sunjoo's record by getting us 6 consecutive powered flights. The longest was a mediocre 22 seconds. During this series we systematically revisited every wing-rigging trick we could think of, to no avail. As Jim said in his videotaped "post-mortem" comments, there was one good result of the day: it was a fair and thorough test. We were out of options and pronounced Mr. Bill, in his current and thus-far best configuration, unworkable as a true sustaining aircraft.

Back to Basics

The situation we faced now was every researcher's nightmare: the discovery that a fundamental and intractable problem lay at the bottom of the hidden queue. We had solved our incremental

problems, but the resulting machine was evidently not viable <u>even if perfected</u>. This seemed particularly unfair, because we had taken extensive pains to guard against getting lost in mere guesswork. We had a strong theoretical base, implemented in a computer analysis which was specifically tailored to be realistic and design-oriented. For example, our analysis took dynamic stall into account and was therefore more conservative than any other we knew of. Why, then, were our calculations telling us we could fly when, in reality, we could not? As a prelude to answering this main question, we decided to use information already at hand to get a quantitative estimate of how badly we were missing the mark. I drew a diagram showing the ornithopter's powered glide slope for a typical flight from the September 22 series. From wind-tunnel information we knew the parasite drag that had to be overcome by net thrust from the wings in order to sustain. Since we also knew the aircraft's weight, it was possible to back-calculate the actual net thrust Mr. Bill must be developing. The result was even worse than expected. The wings were barely canceling their own drag, hence they were only just beginning to overcome the resistance of the fuselage, tail, and strut assembly.

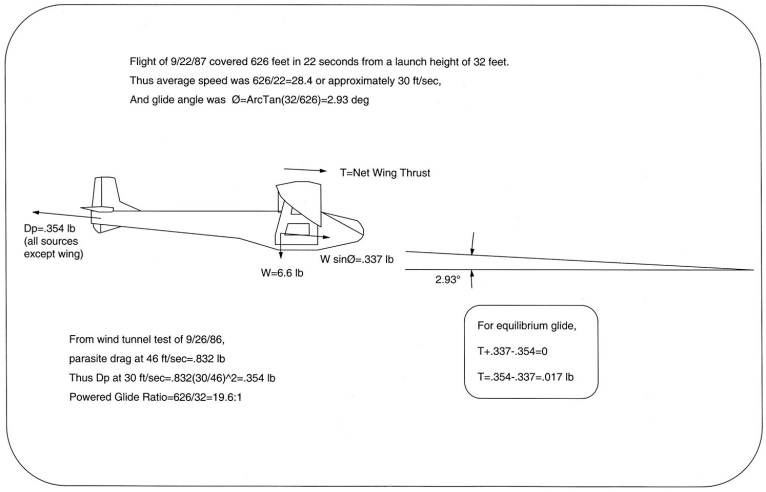

Glide slope diagram and net thrust estimate

Thinking back over our experience, Jim and I could see how we had been fooled. Glide slopes can be deceiving. When we used to fly paper gliders at lunch time in the Battelle auditorium lobby, we once tried a super-efficient Japanese design that had a glide ratio of 7 to 1, meaning that it flew 7 feet forward while losing one foot altitude. Compared to the ordinary folded paper airplanes we were accustomed to, it was so superior that it seemed to fly practically level from wall to wall in the confines of the lobby. Mr. Bill was achieving a powered glide ratio of almost 20 to 1, nearly three times better than the Japanese model that had impressed us so much. In addition the ornithopter, being quite draggy as aircraft go, had a static (non-flapping) glide ratio of around 4 to 1, not much better than an ordinary paper airplane. Thus we saw the

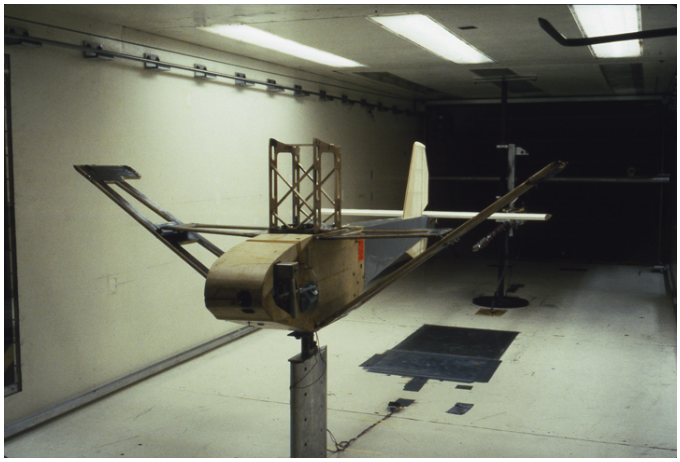

Wingless Mr. Bill in tunnel for parasite drag test

tremendous visual improvement between static and powered glides, and allowed ourselves to assume that we were close to sustaining. In retrospect, there were really two truths involved. The first was that just developing enough thrust to cancel the wing drag made a very dramatic improvement in glide ratio and perceived performance. The second was that driving the glide slope to zero, the requirement for sustaining, required a surprisingly large additional amount of thrust.

Mark 5 airfoil test panel

We always felt better after realizations like these, despite the embarrassment, because knowing the truth at least gave us clues about how to proceed. We agreed that the key to progress now rested with a critical re-appraisal of the outer wing panels, beginning with the airfoil section itself. We thought we knew the circular-arc section pretty well from previous work, but we could no longer take that knowledge for granted. Before I left for Columbus, we built an exact, aspect-ratio 3 rigid model of the Mark-5 outer panel airfoil and wind-tunnel tested it. We found that the effect of our round leading edge spar and fabric fairing was to initiate flow separation, or local stalling, at even very small negative angles. This in turn cut the overall useful angle of attack range practically in half compared with our previous assumptions, and went a long way toward explaining why flight tests didn't live up to our calculated performance.

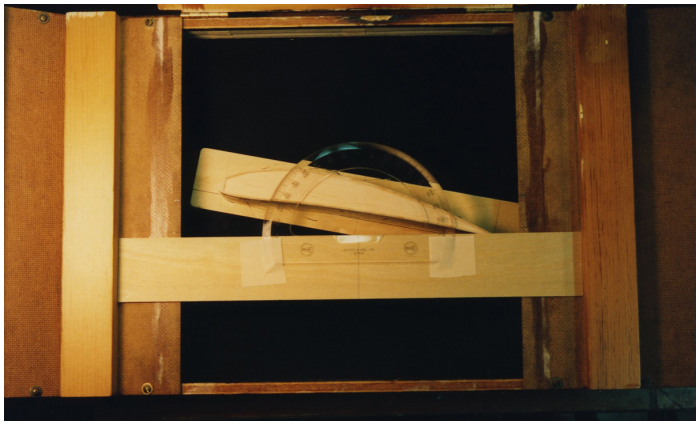

Adjusting the angle of an airfoil model in the test section of the "two-dimensional" tunnel

Over the next two months Jim built a small, specialized wind tunnel that would allow him to examine and compare very closely the flow-separation characteristics of various airfoils. The test section was essentially two-dimensional, hence it was limited to models with only a couple of inches span, greatly reducing the time required to build them. On the other hand, the airfoil chord and the tunnel's velocity matched those of the actual ornithopter, so the Reynolds Number of the flow would be "full scale" and assure realistic results. Jim sent me the data from his experiments and we discussed them via faxes, which had replaced letters as our normal mode of communication. The objective was to track the behavior of sets of mylar tufts on the upper and lower surfaces of the airfoil models. The tufts were visually judged to be attached, partially separated, or fully separated. These

judgments were repeated at intervals over large ranges of positive and negative angles of attack. The negative angles were particularly important since flapping wings have to deal with them far more than fixed wings do. Jim and I both worked out graphical "codes" for interpreting the rather busy data. The initial results, from the baseline Mark-5 section, confirmed our previous conclusion that we had used over-optimistic inputs to describe the outer-panel airfoils in the computer analysis.

Jim continued his flow-separation tests to cover several variations of leading-edge treatments. The only one to offer substantial improvement resulted in an airfoil we named UBSS, for upper-biased single surface. Instead of lying below the arced surface of the airfoil, the UBSS leading edge was faired and biased upward so that most of the "bump" lay above the arc. A natural consequence was that the curved ribs were also located above the grey covering, producing an unconventional look. Jim argued successfully for abandonment of the white wing's freely-rotating ribs in favor of a torsionally elastic leading edge spar to which the UBSS ribs would be rigidly attached, with no rear spar except a residual stub to provide an attachment point at the center panel's rear hinge. This would offer the significant advantages of eliminating rear spar drag and making the twisting resistance of the panel primarily a function of the spar's torsional properties, which could be measured accurately and would remain stable. The existing wing's torsional resistance, on the other hand, was a somewhat murky mix of rear spar bending (predictable) and fabric tension (highly unpredictable and likely to change from flight to flight). Once the unfaired round spar was gone, we were free to design any leading edge shape we wanted. Along with this freedom, however, came additional responsibility. We would have to get the combined spar and fairing torsional properties just right from the outset, because they couldn't be adjusted later. This increased our dependence on the analysis. We didn't mind this restriction because, if the analysis wasn't right, we were doomed anyway.

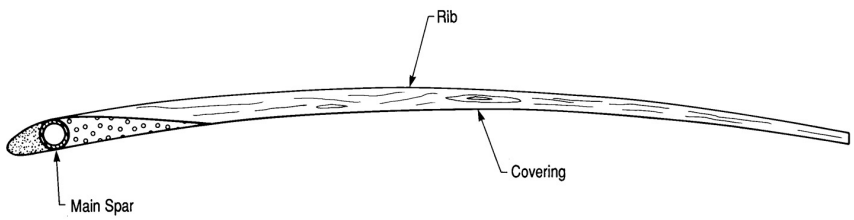

Mark 6 UBSS ("Greywing") airfoil section with faired leading edge and unconventional rib location on top of the fabric covering

Jim also proposed that we increase the flapping amplitude, reduce the frequency, and return to the older method of wing support using H&D links. So many changes at once definitely scared me, but there was something to be said for them. The white-wing configuration had a plus-and-minus 17 degree flapping amplitude, which was indeed small compared with most birds. Raising the amplitude to 30 degrees would allow decreasing the frequency while maintaining or increasing thrust, and two improvements would ensue. First, all problems associated with vibratory resonances would be diminished. Second, a quantity known as "reduced frequency" would come down. This factor influences unsteady flow losses, and a lower value (other things being equal) enhances thrust. A drawback would be that the wingtips would swing down farther and raise the probability of landing damage. I readily understood why Jim wanted to go

back to H&D link supports. As the team's aerodynamicist, Jim was never happy with the variable hinge gaps caused by the sliding couplings at the tips of the center panel. For that matter, I didn't like them either. As described earlier, they resulted from a vibration problem for which, at the time, I could see no other solution. Since the required flapping frequency (and hence vibration problems across the board) would be significantly reduced, I agreed with the proposed changes and we prepared to implement them.

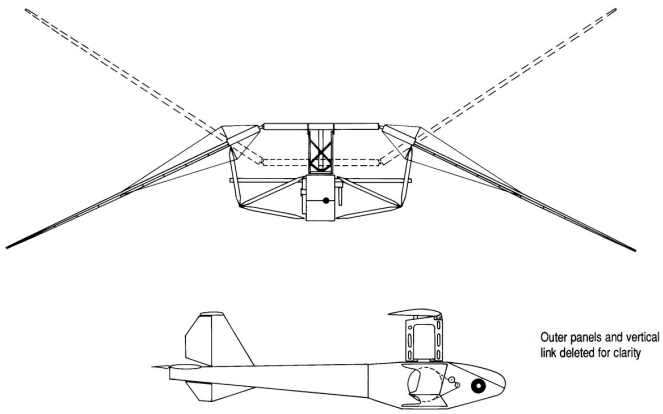

Greywing front and side views, showing H&D links and increased flapping amplitude (compare with page 10)

Until this time, the ornithopter's nominal home base had been Columbus. As a rule, I had tended to have more time to do hands-on work in the periods between flight tests than Jim did (recent exceptions to this had been his work on the center panel and the rear fuselage and tail). The modifications now proposed were going to involve built-up spar construction, extensive use of kevlar, and mechanical-properties verification tests which would be very time consuming. In addition, the work situation at Battelle was such that my freedom to take leave without pay (LWOP) was diminishing. Jim and his lab staff had extensive building experience and expertise in lay-up construction, and there was an opportunity to get some of our work done in the lab without compromising Jim's other projects. I was concerned about being able to support my part of the program, and was in danger of becoming downright depressed, which would make me even less effective. I talked this over with Jim, and we agreed that Mr. Bill should henceforth be based in Toronto. Jim was adamant about my staying active on the project, a stand for which I have been grateful many times since.

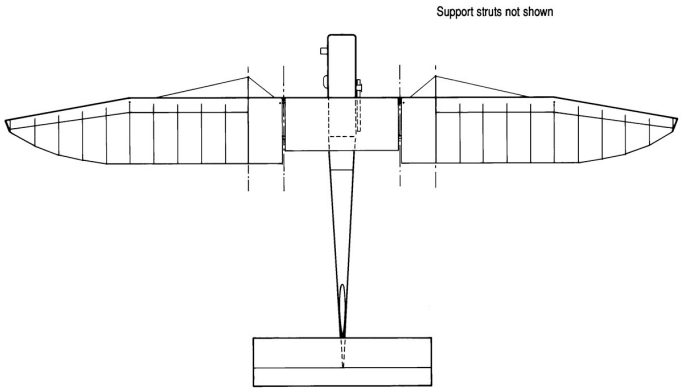

Greywing plan view

There was one additional feature of the two-dimensional airfoil tests which captured our attention, to put it mildly. For completeness, Jim had included a test of a thick, modern, Eppler airfoil section optimized for our Reynolds Number range (see lower figure on page 17). We expected it to show better performance than any of the single-surface circular arc variants, but the extent of the difference was startling. The Eppler section was far superior in maintaining attached flow over a wide range of angles, including the critical negative angles that would most affect flapping-wing performance. We noted this carefully but wistfully, because the Eppler's deep

section would create a rigid, untwistable, double-surface wing panel that would sacrifice all its profile advantage to massive dynamic stall. The only way to induce twist would be to invoke our shearflex principle, and we had abandoned our original shearflexing wings as too awkward and heavy.

Jim at UTIAS with completed Greywing outer panel, showing exposed ribs on its upper surface

Major Changes

The revisions associated with the Mark-6 UBSS wing panels were destined to absorb all of 1988. Jim and other team members went to work on the wings and revised outrigger supports. I worked out the kinematic arrangement of the wing panels and supporting links to provide the desired pivot offsets and midstroke dihedral of 6 degrees. A preliminary test of the completed panels was scheduled for late winter, and I went to Toronto to participate. We found that the Mark-6 wings still needed brace wires to control bending deflections, and these were installed prior to assembling the wings and their support linkage to the thorax in the lab at UTIAS. A hose was run outside to carry the exhaust fumes and castor oil out into the bitter-cold air. Chris Lewis, one of Jim's students and a worker on the project, put on his satirical macho jet pilot's crash helmet. I took my usual position with the 12-volt electric starter. After a frustrating series of false starts, the engine caught and the wings began to flap through their gigantic-looking increased stroke. My ears detected the warning sounds of a mechanical struggle at the margins of survival. The wings seemed to hesitate and lurch, although the O.S. 45 buzzed along steadily. An irregularly-spaced series of sharp pops was followed by a loud crack and a scream from the suddenly-unloaded engine. After a moment we realized that the second-stage belt idler had been torn off the fuselage by the fluctuating tension loads.

Chris Lewis in his crash helmet at a chilly Greywing thorax bench test

The higher loads generated in the new configuration were not a complete surprise, since both a simplified paper analysis and the computer runs had predicted them. A few weeks later I sent a new, strengthened idler up from Columbus and the test was repeated. The results were better, but still not satisfactory. The loud pops, which we had diagnosed as belt teeth cogging (jumping) on the second-stage input pulley, continued. We decided the only proper fix was to enlarge the "bull gear", the big external pulley that drove the scotch yoke crank. This would trade velocity

for tension and reduce the belt loads. In addition, the higher ratio would help to compensate for the loss of engine rpm at cruise caused by the lower flapping frequency. I looked through the Stock Drive catalog and found that the size we needed had to be bought in the form of an extruded aluminum "log" (at rather outrageous cost), then machined from scratch. No matter, it was exactly what we wanted and featured an improved, anti-cogging tooth form. I sent the new pulley set to Toronto for Jim to install and test. This time everything held together at our new target frequency of 3 Hz, and we were ready to resume flight trials.

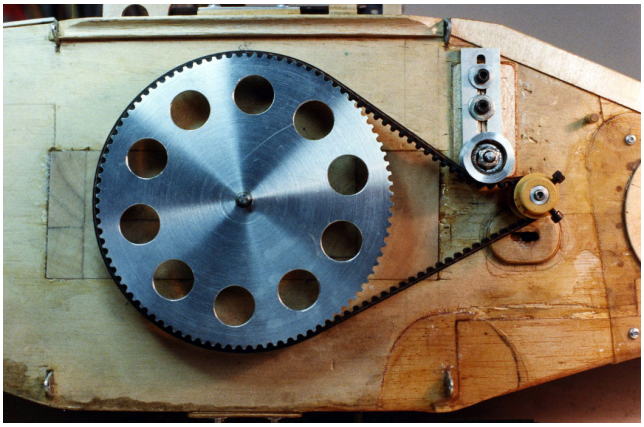

Enlarged second-stage drive pulley cut from extruded aluminum "log" (rotates counter-clockwise)

Nadir

On June 13, 1989 the wind was right for Newton-Robinson. We arrived and set up, anxious to see the results of our extensive rethinking and reconfiguring. We led off with a static glide which looked flatter than before, well-trimmed, and stable. It was time to go for it.

The Newton-Robinson site is a pasture sloping gently down from the road to a ridge overlooking a sod farm some 40 feet below and about a quarter-mile away. On this particular day, the usually-deserted farm was teeming with tractors harvesting the sod and loading it onto flat-bed wagons. We noticed in passing that the sod farmers seemed to be taking an interest in what we were doing. They would point and stop the tractors from time to time to watch us. We started the engine and Jim took his place at the launch point. He waited for a gust of headwind and threw the machine. It dropped so quickly into the weeds that I lost it in the Bolex finder. There was no significant damage, so we tried again. This time Mr. Bill struggled along for 9 seconds, but showed no tendency to climb out or even level off. Still no damage, so we launched a third time. After a couple of seconds the ornithopter started to pull up, but the engine suddenly quit and a moment later Mr. Bill hit with a sickening crash. The sod farmers, who had evidently seen a recent newspaper article about the project, began jeering us in earnest with shouts such as "back to the drawing board" and "15 years down the drain!". Jim, one of the strongest and most resilient people I've known, sat down in the tall grass and put his head in his hands. In retrospect this was the lowest point, the nadir, of the entire program.

It just didn't compute that our obvious improvements would make things worse. Jim tried to take the lion's share of the blame, citing inadequate launches. I didn't argue, but remained puzzled by the extent of the debacle. Mr. Bill had, in fact, gained nearly two pounds since the first launch in 1985, and Jim felt that the launching assignment should be passed to a younger person. The team, having regained some of its usual good spirits, built an utterly stupid-looking (but correctly balanced and weighted) plywood replica of the ornithopter, and held a

launching contest on the UTIAS soccer field. Darius Mavalwalla, a natural athlete, won the "turkey-toss", with Chris Lewis a close second.

Meanwhile, we worked day and night to repair the extensive crash damage. To combat the evident lack of elevator power, we increased its area by 50 percent. To reduce crash vulnerability, a bowsprit and forward anti-drag wire were added to each outer panel. By the 19th we were ready again and the wind was right for Mono. On that day we had a special guest. Karina Dahlin, a journalist and writer for the University of Toronto Magazine, had become interested in the project and had interviewed Jim and me several times. She was a valued friend, and we were glad that she could come out to watch a flight test. We started with a glide to check the controls and give Darius a relatively stress-free initial task. The glide looked good and we were ready for an attempt. My role, as always, was to start the engine and grab the 16mm camera. As I waited, squinting through the viewfinder, I didn't envy Darius. Jim had a sharp eye for every nuance of launches, and he was watching very carefully. At the signal Darius took two warmup steps and gave Mr. Bill a powerful and flawless heave into the air. Once again, the engine cut out after pull-up. The wings stopped at maximum dihedral, giving a dutch-roll instability, and the ornithopter was down within 8 seconds. The next flight, despite another excellent launch, ended in a crash after 3 seconds. We had warned Karina that any given test session could be disappointing, and we were sorry to have been so right. She assured us that she understood, and would like to come out again sometime.

The turkey toss in progress

Everyone agreed that the current trend was outrageous and ridiculous. Logic said the ornithopter was better in every way, yet it was giving results that were worse in every way. As we watched the video back at the lab, I remember being so frustrated that I let out a mock cheer at the violence of the crash. If the machine was going to fail so completely, it might as well have a record-breaking smashup to cap it off. We ran the tapes again and again. Eric had suggested that rather than lacking thrust, Mr. Bill might be developing so much thrust that the elevator was unable to counter the diving

Pilot Eric Edwards and I gesturing to Darius, who is about to stand up and get set to launch the bird

moment caused by the high thrust line. This made some sense, but the aircraft had generous horizontal tail area acting through a large moment arm. Well, maybe the command to pull out just wasn't getting through. We stop-framed the video, and it did look as if the elevator remained about neutral when Eric remembered calling for full-up deflection. We had noticed that the elevator control horn was loose, but we weren't sure whether this was a cause of, or simply a result of, the crash. In any case, the subjects of launch transients and control response had come front and center and were marked for major attention. Jim would concentrate on those areas, and I would take the thorax home to Ohio for repairs.

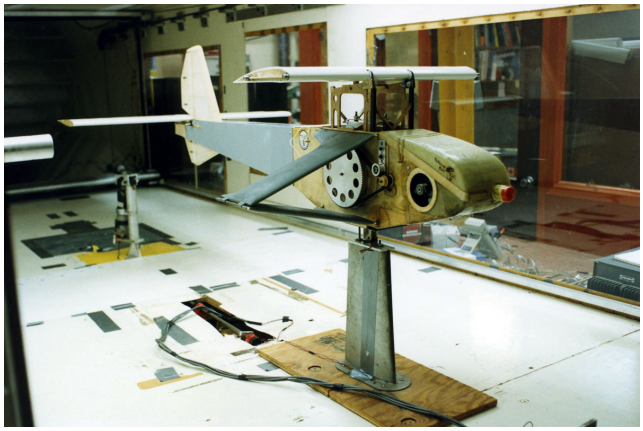

Wind Tunnel test of Mr. Bill, minus outer panels but including new outriggers and control servos

The control improvements over the summer of '89 began with strengthening the elevator and rudder horn mountings and their control runs. The servo torque outputs were measured and found marginal in comparison with calculated hinge moments. Since the original radio system was an ageing Kraft Seventy-Seven series whose frequency was obsolete, it was replaced with an up-to-date Futaba FP system and larger servos. The ornithopter, minus the outer panels, was mounted in the lab wind tunnel and the new controls were shown to actuate fully at 52 feet per second, which was comfortably higher than Mr. Bill's nominal cruise speed of 45 fps. The parasite drag (corrected to cruise speed) measured 0.47 lb, confirming a significant improvement over the 0.83 lb previously measured with the older outrigger arrangement. Continuing the concern for launch issues, Jim wrote the mathematical core of a nonlinear, 3 degree-of-freedom computer simulation capable of tracking the ornithopter's flight trajectory after launch. He programmed the simulation to the stage where it could print out numerical results, and sent it to me with a request to provide graphical output and, if possible, interactive control inputs. I worked on this until the output became a schematic picture of a launch site, with a little stick-figure launcher standing at the top of a slope. When the machine was launched, its flight plotted as a continuous path over the ground. If the path intersected the hillside, that was a

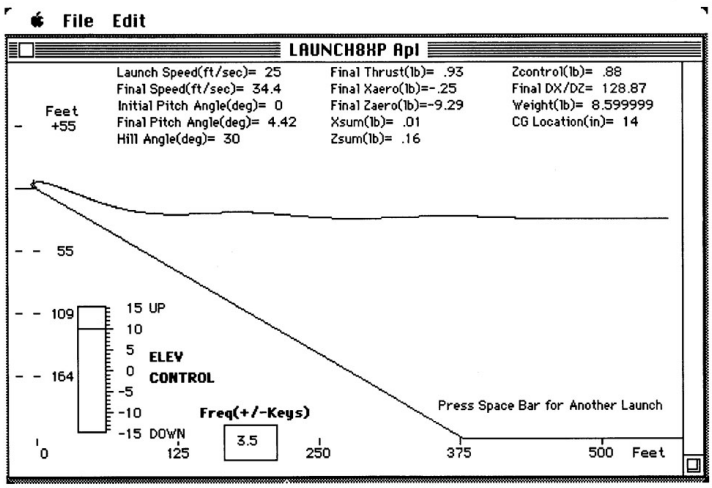

Screen shot of simulated launch and subsequent flight path

crash. A graphical slide control, operated by the mouse, controlled the elevator; and key presses varied the throttle setting with a screen readout in Hertz. To set up a launch the user would enter initial conditions such as launch velocity, pitch angle, flapping frequency, and the slope angle of the ground. Once airborne, we could "fly" the ornithopter and observe the results. Jim was delighted with the finished program, which gave us many useful insights as well as a good deal of entertainment. The simulation was originally intended just to study launch transients, but we soon discovered added benefits. The user could pick the maximum range displayed, and the graphics would zoom in or out to reflect the chosen scale. If we zoomed out far enough, we could simulate an entire flight and see whether or not the ornithopter was sustaining. Needless to say, this was a subject of considerable interest.

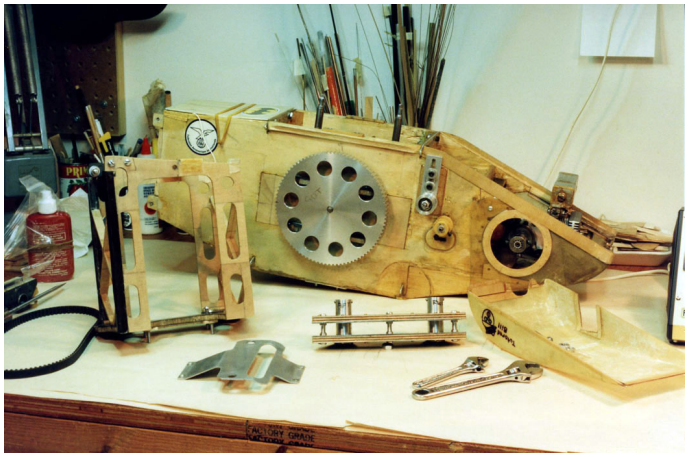

Disassembled thorax, showing removed highrise to left of large pulley

Back in Columbus, there was thorax damage to deal with. The "highrise" is a tall, cagelike structure that transfers the reciprocating motion of the scotch yoke mechanism to the center wing panel. In the latest Mono crash it had taken a bad hit, causing its carbon-balsa laminate base to fail in several places. I cleaned the crushed balsa out of these areas and inserted plywood filler pieces, then patched the carbon where needed. There was also an interesting failure in the aluminum scotch yoke crank. This component had not caused much trouble in the past, but our drive improvements had, ironically, made new types of damage possible. In a crash, the pilot may or may not have time to throttle back and get the wings stopped; usually not. When the ornithopter hits, the flapping is blocked instantly but the engine goes right on driving. Now that we had increased the overall ratio and added stronger, cog-resistant belts, the blockage torque at the crank was so large that it actually distorted the set screw holes in the crank base into ovals, ruining the threads. My solution to this was to cut off the crank's bottom portion and splice in a new base of steel, with a tongue to transfer torque to the remaining aluminum part. While I was at it, I reinforced the crank's supporting base, and the adjacent thorax wall, to combat an annoying tendency of the crank support to twist in response to the belt tension fluctuations. If these deflections became too large they could allow the crank roller to escape its track in the slider, causing the drive to self-destruct. In late July, I packed up the

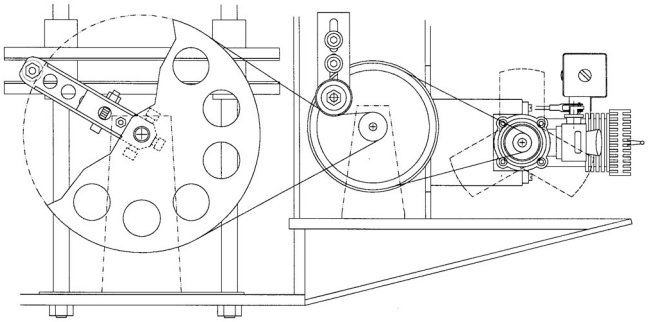

The modified hybrid steel/aluminum crank is shown at the left, behind the large second-stage output pulley

thorax and shipped it to Toronto so Jim and the team could fit up the new outriggers and prepare for flight tests.

A Turn for the Better

On October 24 we were back at Mono, feeling convinced for the Nth time that we had removed the ornithopter's last excuses for not giving us a real flight. Darius had left for a European trip, so Chris Lewis had inherited the launching assignment. Chris gave the machine a good launch, and for the first time it rose higher than the launch altitude and appeared to be sustaining. However, after 14 seconds the engine quit. On the second flight the same thing happened after 15 seconds. The wings stopped at zero dihedral, which removes the yaw/roll coupling needed for effective turning, and Eric couldn't avoid a mild crash landing. These tests were certainly a turn for the better after the recent dismal results, but they didn't meet our criteria for success. Because the engine quit, there was no discretionary landing, and Eric pointed out that the apparent climb could have been due to ridge lift (we launched into an unusually strong headwind both times). The flights were simply too brief to settle the question.

The Greywing version of Mr. Bill in flight

The engine difficulty was troubling. We had experienced several engine failures before, but since all the flights to date had been quite brief, we hadn't considered the stoppages a major problem. Now, with long-flight capability approaching reality, the engine had to shape up. A highly unusual project such as ours was a magnet for well-meant advice from people who had dealt with similar power plants in a conventional fixed-wing setting. At various times we were cautioned that the engine would never run satisfactorily without a prop or flywheel, that it would stall as soon as the wing strokes hit a certain phase relationship with the piston strokes, that fuel with more (or less) nitromethane was the key; and so on. It was our task to separate the real from the apocryphal, and to bear in mind that some of the advice might be correct and valuable. It was decided that we first had to verify directly that our particular O.S. 45 was functioning properly and had adequate margins on the peak torque and power maximums demanded by the wings. With Eric's help we built a simple reaction dynamometer in three days and got enough experimental data to plot full-throttle

Improvised dynamometer for engine testing

torque and power curves. On that graph we also plotted the peak instantaneous torque and peak instantaneous power required for cruise, as derived from the computer analysis outputs. There was at least a two-to-one margin in the engine's favor. When I left for Columbus, again taking the thorax for repairs and modifications, we agreed to continue seeking causes and cures for the engine quitting.

New Developments

While we were in the process of implementing the Mark-6 wing and its UBSS airfoil, Jim had a very creative idea. He had been thinking about the obvious superiority of the double-surface airfoil in the flow separation tests, and how we were prevented from taking advantage of it unless we could somehow return to a shearflex construction. As described earlier, we weren't happy with our first attempt at shearflex panels because they were relatively stiff and heavy; hence we had turned to single-surface wings. In a flash of insight, Jim envisioned a different form of shearflexing. The ribs would not be chordwise-slotted to accommodate the flexing. Instead, they would be made in one piece and bonded alternately to the covering material. That is, the upper perimeters of ribs 1, 3, 5, etc. would be bonded to the upper covering, and the lower perimeters of ribs 2, 4, 6, etc. would be bonded to the lower covering. The trailing edge would still be split into upper and lower halves, as required for the basic twisting freedom to exist. Because of the alternate bonding, the covering could slide relative to the unbonded rib perimeters and satisfy the kinematic requirements of shearflexing. The forward ends of the ribs would attach solidly to a D-shaped leading edge spar. As in the UBSS wing, the spar would provide essentially all the bending strength and torsional elasticity of the panel. This approach would allow a very light, strong, and simple structure which was fully compatible with fabric covering materials. Jim put Darius Mavalwalla to work on making a preliminary, full-scale panel for wind tunnel testing. Although this first implementation didn't develop much shearflex amplitude, it did thrust well enough to offer serious encouragement. We agreed to continue the development in parallel with the UBSS, as a backup concept. As a subject for his senior thesis, Henry Kwok began construction of a second shearflex test wing.

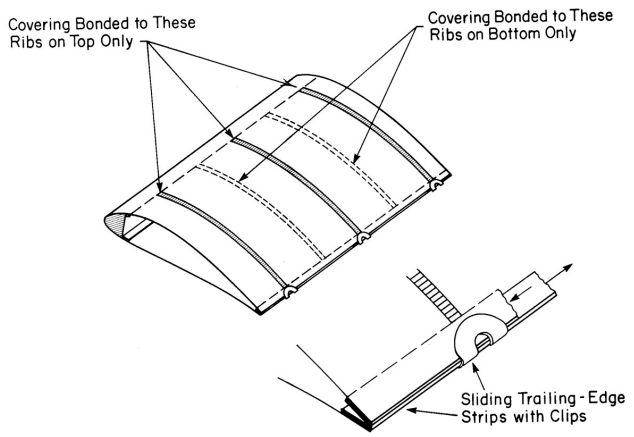

The alternate-bonding shearflex concept

The reincarnated shearflex development was thus well underway in Toronto over the winter of 1989-90, while I undertook another round of thorax work in my basement shop. There were two issues to deal with. First, the latest Mono flights had finally damaged the venerable scotch-yoke slider beyond repair. The slider was the component that converted the crank rotation to harmonic reciprocation and drove the highrise which, in turn, drove the center wing

panel. Second, we had agreed to try to wring out one last increment of drive ratio. This reflected our determination to give the engine ample mechanical advantage, keep the cruise rpm reasonably near the maximum power condition, and hence minimize any tendency to quit.

In rebuilding the slider I followed the doctrine that a few ounces could be added, if necessary, to make a vital component more viable. In truth, it was surprising that the slider had survived to this point. It was made from carbon/balsa/carbon (CBC) laminate with aluminum roller tracks held by rows of tiny 0-80 screws through the laminate. The 1/4-inch thick CBC plates were light and incredibly stiff, but their crush resistance was limited. Once crushed, the end-grain balsa filler was worthless. The roller pressures were high enough to score and plow the aluminum tracks occasionally, and I had hand-filed them several times. The rebuild incorporated carbon-faced, quarter-inch plywood plates and steel roller tracks, still held by tiny screws because there was no other safe option.

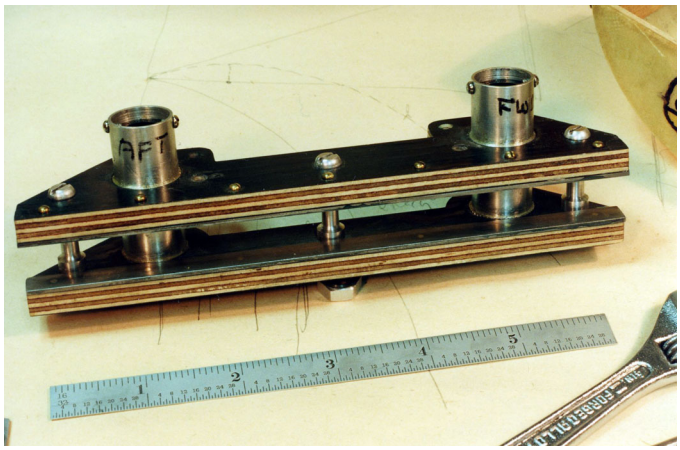

Rebuilt slider with carbon-covered plywood plates, steel track strips and the original tubular housings for ultra low-friction recirculating ball bushings

The ratio modification required increasing the size of the first-stage output pulley. The largest pulley I could shoehorn into the available space brought the overall ratio to 54.5 to 1 and placed the cruising engine-speed range at an acceptable 10,000 to 11,000 rpm.

In March, 1990, I took the thorax to Toronto. Jim had repaired the damage to the wing, rear fuselage, and stabilizer incurred in the last Mono crash, and we ran a successful bench test with the UBSS wings in anticipation of resuming flight tests in June. At the moment, though, the focus of attention was Henry Kwok's second-generation shearflexing wing. It was completed and being prepared for a wind tunnel test. Henry's wing was built to the new Mark-8 planform, having a straight trailing edge and a partially swept leading edge. The sweep in the outboard portion provided the moment necessary to help the time-varying aerodynamic forces drive the shearflex twist. However, it incorporated a symmetrical airfoil (NACA 0012) because only thrusting was going to be measured.


JMH brandishing the Kwok wing

The UTIAS tunnel's wing-drive mechanism was modified to accommodate a larger 30-degree flapping amplitude. Because of various problems with data-taking electronics, proper tests weren't possible until late March,

after I had returned home. Changes in the method of holding the split trailing edge together produced further improvements, and by April 12 Jim had some definitive results, showing thrust levels more than adequate to overcome the ornithopter's drag. Of equal importance, he was indicating excellent agreement with computed performance. By this time we were using an integrated program known as "Combowing". It combined the functions of the former "Flapping" and "Dynflex" programs into a single unit, and had been modified and compiled to run faster and to make inputting and saving data rapid and convenient. The success of Combowing as a design and analysis tool was the key that made rational design of the UBSS and shearflexing wings possible.

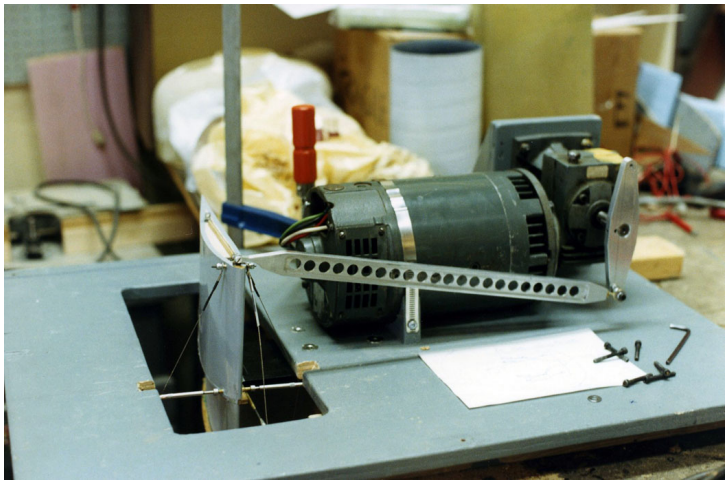

The UTIAS wind tunnel's wing-flapping drive

When I returned for the June flight tests, the weather failed to cooperate; neither site gave us a single day of acceptable wind conditions. We went out to Mono on June 6, but had to scrub because of excessive headwind. The time was used to do lab work and discuss a new factor that had entered our plans: the Expo factor. We had agreed to supply an exhibition ornithopter for the Canadian Pavilion at Expo '92, the world's fair scheduled for Seville, Spain in the summer of 1992. This was to be a genuine, flight-grade machine; but exhibited statically at the fair with the wings slowly flapping under electric power. We were given some funding to assist in design and construction of the machine, which immediately acquired the nickname "Expothopter." To meet this commitment it was desirable to start preliminary design work soon. However, an even more pressing matter was that we had also agreed to provide some flying footage for a film which was to be shown at the pavilion's Imax theater. The filming schedule had to precede Expo itself by about a year, so the only craft we could hope to fly for Imax was Mr. Bill. Jim and I could have interpreted this to call for suspending work on the shearflex wings and resuming tests of the UBSS version on an accelerated schedule, but that was not what our instincts favored. The shearflex development was extremely promising, and we had no intention of compromising it.

In Toronto, the remaining portion of the summer of 1990 was spent in concentrated work on shearflexing configurations. Jim worked on the tricky problem of achieving linear or uniform twist in response to flapping. This "aeroelastic tailoring" required both adjusting the planform shape and controlling the distribution of torsional stiffness along the outer part of the cranked (partially swept) leading edge spar. He sent me summaries of his progress. I responded with my slant on what he had found, and sometimes made Combowing runs to further explore some facet of the design. It was a combined analytical and empirical task requiring repeated sets of "what if" parameterized computations. Jim introduced a triangular tip shape which provided

practically perfect twist linearity and also simplified the required stiffness variation. This became known as the "bat tip" since it was inspired by studying the wings of his daughter April's pet bat, Cassandra. In the latter part of the summer Jim's chief lab engineer, Bill McKinney, designed and constructed a greatly improved wind-tunnel balance rig which could mount and flap actual flight-ready wing panels. The tunnel's data acquisition equipment was also upgraded.

April displaying Cassandra's left wing

In addition to supporting Jim's wing design task, I worked on preliminary layouts for Expothopter's drive module. Expothopter was to be a conservative extrapolation of Mr. Bill, slightly larger, much more streamlined, and designed for frequent and extended flights.

Converging

Yet another summer activity for Jim was a return to testing airfoil sections in the special 2-D flow visualization tunnel. He had been corresponding with Michael Selig, a professor at the University of Illinois. Jim explained the unique requirements of ornithopter airfoils, particularly the need for high leading-edge suction efficiency and attached flow at large negative angles. Selig agreed to do a custom design for our project. As mentioned previously, we already had separation data on an Eppler 193 airfoil. Jim built additional 2-D models of NACA 6412 and Selig S-1020 sections. His test results showed that the custom Selig section was easily the best of the three for our purposes. An additional benefit was that it was also the thickest (15 percent) which gave considerable structural depth.

Selig S-1020 airfoil flow model

When I arrived in Toronto in September, the new wind tunnel rig was operating. We ran a test on the right-hand UBSS wing, and plotted the results. To barely sustain we found that a flapping frequency of 3.4 Hz, higher than we wanted, would be necessary. Our best computed estimate for a NACA 6412 wing in a shearflexing configuration offered sustaining flight at 3.0 Hz. Performance with the Selig airfoil promised to be even better. Moreover, we were sure that we could, once and for all, get rid of brace wires if we used shearflexing wings with their deep-

section spars. If we persisted with the UBSS wings, we might become mired in a series of marginal flights or, worse, have a crash and lose time to repairs that could have been devoted to perfecting better wings. The decision boiled down to this: If we intended to pursue the shearflex wings at all, we should do it now. Since we did want to pursue them, our decision was made. We entered it, along with supporting reasoning, in the laboratory journal and prepared to go full speed ahead with implementing the shearflexing, Selig-airfoil design, later to be known as the Mark-8S wing. Our target flight window was June, 1991.

By December, Jim was into the demanding final design of the Mark-8S outer panels. Henry Kwok had been making up spar samples and testing them for torsional and bending deflections. The spars not only had to be light and strong, but were required to have specified torsional stiffnesses at particular points along the span. Getting laid-up composite structures to have such predictable elastic properties was a difficult and time-consuming challenge. Ultimate strength was also critical, so spar samples were tested to destruction and rated against the computed maximum loads they would see in flight.

A sudden attack of wing-design burnout

To fabricate the ribs, Jim used a technique he had learned from Ray Morgan on a visit to AeroVironment. The ribs were made of foam and edged with spruce cap strips (Ray pointed out that on an equal-weight basis, spruce strips resisted buckling better than carbon). To begin the process, a plank of foam was hot-wire cut to the Selig airfoil profile. The strips were bonded to the plank's surface and used as cutting guides to hot-wire slice the plank into individual 1/8-inch thick ribs. The cap strips strengthened the ribs and also provided a smooth surface for the covering to slide over during shearflexing. The covering selected for the new panels was Litespan, a heat-shrinkable polyester material with randomly-oriented fibers.

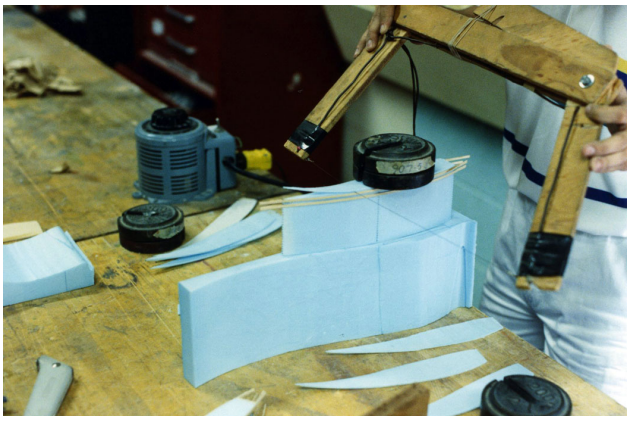

Hot wire slicing of foam ribs (cap strip acts as guide)

In addition to major components like the spars and ribs, the new wing design depended on proper functioning of detail items like the small, semi-circular clips that held the upper and lower parts of the trailing edge together.

Back in September, we had done some initial work on getting the clips to hold firmly but still allow free sliding at the shearflex interface.

In mid-January, Henry began construction of the right-hand Mark-8S outer panel. By early March it was completed, and I went up to Toronto to participate in its wind-tunnel testing. I well remember my first glimpse of the wing. Jim had told me that I would like its looks, and he was right. All our previous designs had used unshrunk coverings that were just laid on. This was a perfectly reasonable technique because tight coverings would have deformed the compliant structures of those wings, but the unavoidable wrinkles always bothered me. The robust shearflex design of the new panel allowed the white Litespan covering to be stretched smooth and taut, and remain so as the wing twisted. It was a beautiful sight. We started the tunnel fan and adjusted the wind speed to the predicted cruising speed of 45 feet per second. Bill McKinney had rigged a strain gage sensor so we could measure the spar bending moment at the flapping hinge. At just over 3 Hz, the peak moment was only about one-third of the value that had caused test samples to fail. Then we made a thrust and lift run. The average thrust increased almost linearly from a negative 0.1 lb at 1 Hz, to a positive 0.32 lb at just over 3 Hz. The average lift remained steady at about 3.5 lbs. When doubled to account for a second panel, and combined with the center panel's estimated lift contribution, these values met the requirements for successful flight. We were encouraged, but our years of experience on the project had taught us, again and again, not to take things for granted. Only a flight would reveal the final truth.

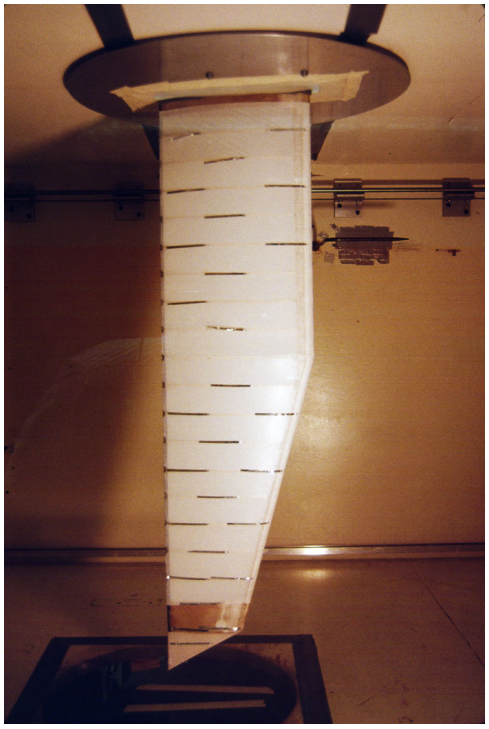

The full-size Mark-8S outer panel, ready to be flapped in the wind tunnel. Temporary mylar strips indicate attached flow, and the small trailing-edge clips are visible along the left side. A bat-tip is fitted below the brown band.

The spring months were devoted primarily to building the left panel. This task fell to Dave Loewen, who had joined the UTIAS lab staff and become a member of the ornithopter team. Other activities included further checks on measured and calculated parameters. These began with wind-tunnel tests on a non-twisting, rectangular-planform wing model incorporating the minor "lumps and bumps" of actual construction. The experimental characteristics matched well with Selig's predictions. Additional flapping lift and thrust runs with the right outer panel were made to check the effects of better sealing at the root, where the wing penetrated the tunnel ceiling. To refine the inputs to Combowing, the "washin" distribution of the left panel was carefully measured. The washin distribution is a structural pre-twist built into the wing to compensate for the opposing ("washout") twist caused by the load from the sustaining (non-flapping) part of the ornithopter's overall lift distribution. With this information, Jim made a

set of final Combowing runs and plotted the results along with the right-panel experimental data. The agreement was excellent.

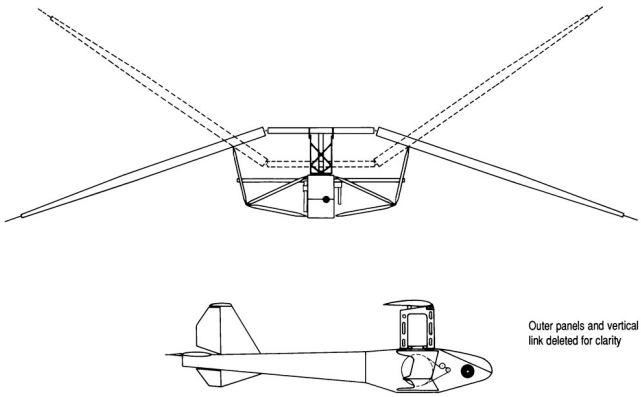

Shearflex wing front and side views. In this final configuration, all brace wires have been eliminated.

Ted Nunoi, a summer student, worked on construction of the new carbon/epoxy H&D links, one of which was given an instrumented load test in May. The upper ends of the H&D links supported the main flapping hinges, so their buckling strength was critical, as was the integrity of their bolted-on end fittings. The new links were much lighter and thinner than the original parts, but withstood a load well above the design value.

Meanwhile, plans were laid to continue the campaign against engine-quitting. Team members made up a plywood dummy rear fuselage and supporting frame to allow mounting the ornithopter on the bed of Bill McKinney's pickup truck. The objective was to run at flying speed with wings flapping while having access to the engine adjustments, and maintaining the ability to observe closely the engine and fuel system behavior.

At the Threshold

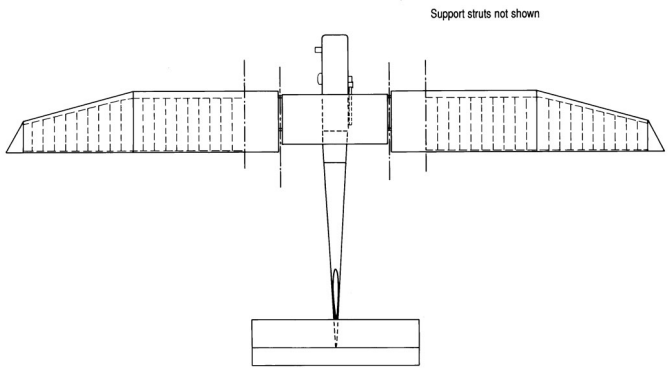

Shearflex wing top view. The swept leading edge helps the varying lift forces generate the required twisting moments.

On June 7, I arrived in Toronto. On the 13th we static-tested the ornithopter for the first time with the new shearflexing panels installed. Dave Loewen knelt behind the Workmate and held the machine firmly on his left shoulder. Eric advanced the throttle to accelerate the flapping until we saw a period of 0.32 second on the electronic counter readout, which meant that the frequency was just over 3 Hz. He held the frequency for 20 seconds, and throttled down. We repeated the sequence. There was no damage and no unexpected behavior. Mr. Bill was looking good. Immediately afterward, we set up the pickup truck rig and went out to try a test at flight speed.

As all researchers know, carefully-planned experiments often play out with unexpected twists. In this case, although the weather was sunny, the wind kept increasing until it became a virtual gale. We simply aimed the truck into the wind and did the experiment standing still! The

engine had run for 3 or 4 minutes at 3 Hz without faltering when suddenly, after the wind shifted to the right, an incipient spar failure in the right wing appeared. We shut down immediately and went home to inspect the damage. Apparently, the 1/64-inch plywood covering and balsa reinforcement near the rear pivot joint had failed, allowing the thrust to swing the wing forward and cause a partial leading-edge spar failure near the root. We found the spar web undamaged, greatly simplifying the repair procedure. The plywood-sheet attachment was reinforced with chopped Kevlar and epoxy on both panels to prevent recurrence of the failure.

The truck test in progress

During both the static run and the truck tests, we had noticed some foaming in the fuel tank. The tank had always been vibration-isolated by external elastomer foam packing, but evidently this was not sufficient. To provide more aggressive slosh damping and foam suppression, we packed the tank with plastic scouring-pad material (a valuable suggestion from Brian Alsop of Keith's Hobbies in North York, Ontario). An additional benefit from the packing was positive prevention of pickup-tube bouncing, which can produce momentary fuel starvation.

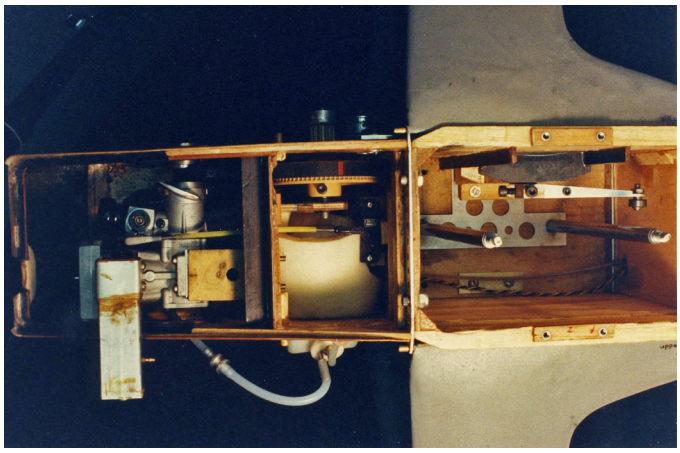

Top view of open thorax showing foam-wrapped fuel tank (center) and external fuel line running forward to the engine compartment

After the wing repairs and fuel-tank modification, we ran another static test on the 15th. This time the engine was run for a full tank (about 4 minutes) at various speeds and in orientations ranging from extreme nose-up to extreme nose-down. No foaming whatsoever appeared. Murphy wouldn't quite let us by, though. We noticed a crack in the second-stage input pulley. The pulley would have been made of aluminum if we'd had our choice, but the size we needed was only available in polycarbonate. We didn't have a spare, so I sketched up an aluminum cap ring that would temporarily reinforce it. The UTIAS machine shop made the ring, and by the 17th we were flight-ready and waiting for weather.

On the 18th we went to the Mono site, arriving about 2 PM. The whole team waited, hoping for the predicted shift of wind direction to the South, but it never happened. We had learned, the hard way, not to yield to the temptation to compromise on launch conditions. On the way home, Jim and I stopped and took some terrain-profile measurements at the Newton-Robinson site, so we could represent it correctly in diagrams and in the Launch simulation. I stayed on for a full extra week, but the winds were never right at either site.

At the time I left, we were resigned to the fact that the maiden flight of the shearflexing wings would occur in early Fall, in front of the Imax camera and crew. In a way, we didn't mind this. We would have an undamaged machine in peak condition, and the fates could do with us what they wanted. The team and the ornithopter were as ready as they would ever be.

We used July and August to make some progress on Expothopter. Jim worked with Dave Loewen, Henry Kwok, and Ted Nunoi on the forms for the fuselage, tail boom, and V-tail fins. In Columbus, I worked on the layout and detail design of the aluminum-cased power module which would contain all drive components and provide the attachment points for the wing-supporting outrigger struts.

The Reckoning

The scheduling of our next flight test was governed by an external factor: the Imax filming schedule. Imax is a unique cinema system that runs 70mm film horizontally through a special camera to produce an unusually large and wide frame, which is projected on a 40-ft-tall screen. Imax theaters are located in many major cities. The Air and Space Museum in Washington has one, as does the Air Force Museum in Dayton, and Ontario Place in Toronto. The Expo '92 film that would involve the ornithopter, entitled "Momentum", was to be a compilation of events across Canada. The Imax equipment would be operated by a director and crew from the National Film Board. We were told that there were just two four-day intervals when the crew would be available for us, the first one beginning September 4, 1991.

I drove to Toronto on Friday, August 30. For the first time in memory, we had almost nothing to do in the way of preparing the machine. Our only task was to replace the cracked second-stage input pulley with the new one I had brought. We epoxied the protective aluminum cap on it for good measure. Jim and I spent a relaxed weekend, trying not to dwell on the tenser aspects of the coming days. On Monday, we went through the flight boxes and checked all the tools, supplies, and spares. A missing item 40 miles from home was not something we wanted to face.

On Tuesday the 3rd, we assembled the launch dummy (the "turkey") for Dave Loewen to make some final practice launches on the grass lawn at the north side of UTIAS. Dave was taking over for Chris Lewis, who had gone to work for a Toronto Aerospace firm. We calculated the velocities of six launches from measuring-tape and stopwatch data. The averaged results confirmed that we needed a minimum of about 10 ft/sec of headwind to achieve flying speed. We also used this opportunity to give one of Jim's students, Gerard

Schmid, a chance to become familiar with my newly-acquired camcorder. Gerard and Bill McKinney would be handling the video at the next flight attempt, and I was going to be stuck with the Bolex again because no one else wanted to deal with it. I really didn't mind, since the old spring-wound, auto-nothing camera was second-nature to me, whereas I probably knew less about my camcorder's many features than Gerard did.

As pilot, Eric Edwards kept close track of the weather and had primary responsibility for deciding whether we were "go" for a flight test. The weather looked generally good for Wednesday, but the wind was always a question and we would await Eric's decision tomorrow morning. The NFB/Imax people had called earlier in the day and said they were ready to come out whenever we wanted. Tuesday evening, over our traditional nightcap of Bailey's Irish Cream, Jim and I discussed the implications of the two flying sites. If the ornithopter was going to crash or have its usual forced landing, Mono would be preferable because the hill was higher, and the Imax crew would have more time to get at least a powered glide on film. If Mr. Bill was going to sustain, Newton-Robinson would be better because the sod farm offered a superior landing area; and the open topography with its low, distant horizon, was more photogenic.

Settled into the comfortable day-bed in Jim's study, I thought of the many pre-launch nights we had been through. We seemed to have complementary methods for dealing with them. I couldn't shake the superstition that if I envisioned the ornithopter sustaining, it would not come true; so I would try to avoid thinking about the launch. Jim, on the other hand, liked to imagine Mr. Bill climbing into the sky on proud, flashing wings. These exercises kept us current in aerometaphysics.

On the morning of September 4th the weather looked pleasant, but from Jim's house we couldn't tell much about the wind. We had breakfast, loaded up our part of the equipment, and drove over to the Institute. Eric came into the lab office after a while and said a moderate North wind was forecast. That meant Newton-Robinson. Jim called the Imax crew while the team and observers prepared to drive out to the site.

Ernie and Tony setting up the Imax HD camera

We arrived at Newton-Robinson, set up the Workmate, and were getting ready to assemble the machine when the Imax party arrived with three truckloads of equipment. Heading up the crew were director Tony Ianzello and technical advisor Ernie McNabb. They set up the massive camera on a low tripod and laid bags of lead shot on top of it. Ernie explained that this was for vibration suppression because they were going to use the new HD (High-Definition) process which required shooting at 48

frames per second. Tony said they wanted to film the launch from the front, then change the camera position to show the flight in progress. Therefore, could we please launch once, recover the aircraft, and launch again? Jim and I explained that we certainly could, in our dreams; but in the real world of Mr. Bill, second launches couldn't be taken for granted. We arrived at a compromise in which Dave Loewen was filmed making a series of simulated launches with the wings flapping and the mechanism cycling away. This took a long time, by our standards, and I remarked to Jim that the ornithopter's warranty was running out.

Dave Loewen running one of many simulated launches

Finally, the fake launches were over and Jim spoke the traditional line, "it's harm's way time." I remember my impression of the scene. It was a beautiful afternoon with vivid blue sky, scattered white clouds and cool, dry air. The Imax camera had been moved behind Dave and to his left. Farther down the hill were ornithopter-team alumni Chris Lewis, Henry Kwok, Jim Winfield and Karl Stoll. A group of observers stood to Dave's right. Karina Dahlin had come out, as had perennial supporters Bill Ungar, Matt Malone and Darin Graham. Gerard Schmid was on Dave's right with camcorder 1, and Bill McKinney was farther down the hill with camcorder 2. We refueled the tank and Dave knelt behind the Workmate, keeping a firm grip on the outriggers. The engine started easily, and I walked over to pick up the Bolex. Jim stood a few feet to Dave's right and prepared to call the launch. Eric adjusted the mixture and helped Dave stand up with the throbbing machine on his shoulder. Tony Ianzello signaled that he was ready to film. Eric was set with the transmitter.

September 4, 1991: Launch of the first flight

The ornithopter was about to be flown under power for the 37th time in six years of flight trials. It had never unequivocally sustained, and its longest flight to date had lasted 27 seconds.

Jim looked at Eric and me; then down the hill at the gusts rippling up the slope through the underbrush. He gave a chopping signal to start the Imax camera, then a sidearm sweep to Dave who took four steps and delivered a smooth, level launch. Eric added some throttle and the machine flew horizontal for a few yards. Then it began to angle downward and I thought, watching in the Bolex finder, that we would have another powered glide. But Eric was just gaining a little speed. Mr. Bill began to climb. Eric steered briefly left and then began a sweeping right turn. The machine was still climbing. There was no sound except the now-faint buzz of the engine and the whir of the Imax camera. Jim brought us out of frozen suspense with a long, raucous howl of joy and relief. Everyone began to cheer and applaud. When the Bolex's spring motor quit, I knew we had passed the 30-second mark. I dropped the camera and ran over to Jim just as Gerard swung the camcorder around for a brief shot of our reaction. We were at nearly the same spot where Jim had sat in despair on the 13th of June, two years before. The machine had completed another 180-degree right turn and was headed to our left again. It was hard to believe that the perpetually-struggling Mr. Bill had metamorphosed into this smooth and graceful flyer. Eric was keeping it close-in and fairly low, for the cameras. At 90 seconds the Imax camera ran out of film, having consumed its allotted 1200 dollars worth of raw stock. On the next lap, Eric flew the ornithopter down the slope toward the sod farm and prepared for the project's first true discretionary landing. He reduced the flapping rate and skimmed Mr. Bill over the grass for a couple of hundred feet, then chopped the throttle and set it gently on the ground. The time in the air had been one minute and forty-six seconds.

Mr. Bill on his way -- the twisting of the shearflexing wings is clearly visible

Really cruising for the first time

Team members and observers milled around, hugging and shaking hands. Karina, Jim, and I were visibly teary. After a decent interval, Tony Ianzello came over and asked if we could fly again. The Imax camera used fixed focal-length lenses, and he wanted some closeups to go with the wide-angle coverage. Our initial reflexive answer was negative. Jim and I had just seen the ornithopter do the one thing we had dreamed of through six years of testing, and the thought of some stupid, Murphy-driven event damaging it was too much. Eric and other team members talked us back around, and we agreed to consider another flight. When the machine had been retrieved and fastened to the Workmate, we inspected it closely. There was no externally-visible damage. I removed the second-stage belt and cycled the wings slowly, feeling for rough spots. None found. No loose pulleys or belt damage. The transmitter and servos tested normal. We were on for another launch.

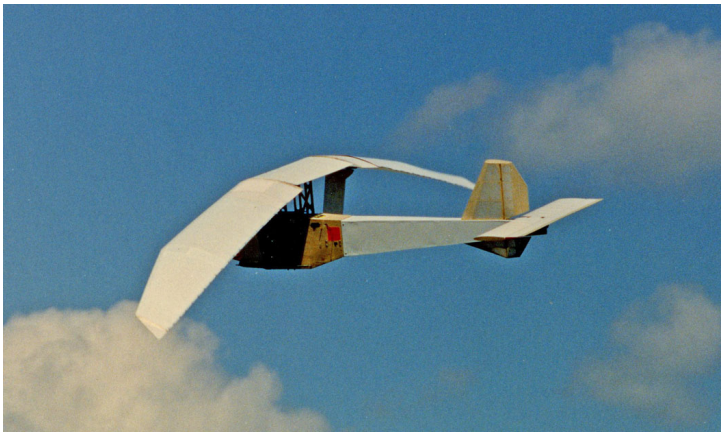

An unusual wings-down view

This time Eric climbed the machine straight out, turned sharply left, then back to the right and began a series of serpentine, circling, and figure-eight patterns at an altitude of about 200 feet. He covered a wide variety of flight directions including upwind, downwind and crosswind. The turns were rapid and well-coordinated. I had the unprecedented experience of being able to rewind the Bolex camera, not once but twice, and change lenses as well. After a while someone yelled "heads up, down there" to alert the lower observers that a landing was imminent. On the next lap Eric again flew down the slope and out over the short grass, holding the low, slow-flapping float even longer than before (nearly everyone who later saw the video remarked that during the landing approaches the ornithopter looked particularly birdlike). The machine landed without damage again, except for a crack in the sub-rudder. The second flight had lasted two minutes and forty-six seconds. We calculated later that it had covered a distance of well over a mile.

Slow-flapping toward a smooth landing on the sod farm

We continued the festivities for a while. I noticed that Matt Malone was going to retrieve the machine all by himself, so I ran out to help him. By the time we got back, the Imax people had scoped out a few follow-up shots, which included the entire team marching up the hill, carrying Mr. Bill. Tony Ianzello and Ernie McNabb told us how pleased they were to have gotten far better flight footage than expected, and we responded that it had certainly been a pleasure to work with them. After an hour or so everyone was packed up and heading for home. Later the team gathered in the lab back at UTIAS, broke out the victory champagne that had doubled its age while in reserve, and watched the video that Gerard Schmid and Bill McKinney had taken. At dinner that night, Jim's wife Suzie and daughter April brought out a decorated "ornitho-cake." Later I phoned my wife. It seemed that I had been calling her for ages, always with mixed or disappointing news. This time I said, "Jane, we had two completely successful flights." The connection was fine, but I had to repeat myself.

Team members and guests at the Newton-Robinson site shortly after the 9/4/91 flights.
Left to Right: Matt Malone, Jerry Harris, Jim DeLaurier, Bill Ungar, Karl Stoll, Henry Kwok, Jim Winfield, Bill McKinney, Chris Lewis, Eric Edwards (with transmitter), Dave Loewen, Gerard Schmid.